LOT 252
AMELIA NATIONAL #1B PB 7/191

REED DAVID H & REBECCA A
95032 SWEETBERRY WAY
FERNANDINA BEACH, FL 32034

2025

26-2N-28-006A-0252-0000

NASSAU COUNTY PROPERTY

BUILDING CHARACTERISTICS

ELEMENT	CD	CONSTRUCTION
Exterior Wall	16	WD FR STUC 100
Roof Structur	08	IRREGULAR 100
Roof Cover	03	COMP SHNGL 100
Interior Wall	05	DRYWALL 100
Interior Floo	11	CLAY TILE 60
Interior Floo	14	CARPET 40
Air Condition	03	CENTRAL 100
Heating Type	04	AIR DUCTED 100
Bedrooms		4 100
Bathrooms		3.5 100
Frame	02	WOOD FRAME 100
Stories	1.	1. 100
Units		0 100
Occupancy	00	NONE 100
Quality	03	Quality Level 03
DOR CODE	0100	SINGLE FAMILY
MAP NUM		MKT AREA 04
NEIGHBORHOOD/LOC	4042.00	

AREA TYPE	TOTAL GROSS AREA	PCT OF BASE	YEAR	TOT ADJ AREA	SUBAREA MARKET VALUE
BAS	270	100	2019	270	56,481
BAS	2,658	100	2019	2,658	556,017
FGR	773	55	2019	425	88,904
FOP	24	30	2019	7	1,464
FOP	1,114	30	2019	334	69,869
TOTALS	4,839			3,694	772,734

MARKET ADJUSTMENTS

TYPE	MDL	EFF. AREA	TOT ADJ PTS	EFF. BASE RATE	REPL. COST NEW	AYB	EYB	ECON	FNCT		NORM	% COND
0500	11	3,694	135.7884	214.55	792,548	2019	2019	0	0	0	2.50	97.50

1 SFR CUST – 100% - 2025 Heated Area: 2928 HX Base Yr 2025

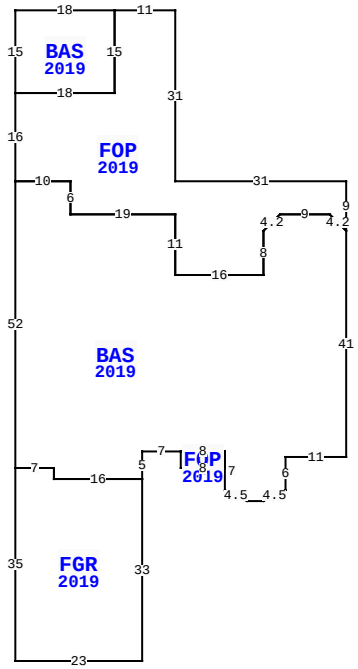

95032 SWEETBERRY WAY, FERNANDINA BEACH

BLD DATE		LGL DATE	
XF DATE		LAND DATE	05/08/2025 MLU
INC DATE		AG DATE	

VALUATION SUMMARY

VALUATION BY		STANDARD
Tax Group: 4	Tax Dist:	
BUILDING MARKET VALUE		772,734
TOTAL MARKET OB/XF VALUE		82,006
TOTAL LAND VALUE - MARKET		200,000
TOTAL MARKET VALUE		1,054,740
SOH/AGL Deduction		0
ASSESSED VALUE		1,054,740
TOTAL EXEMPTION VALUE	HX HB	50,722
BASE TAXABLE VALUE		1,004,018
TOTAL JUST VALUE		1,054,740
NCON VALUE		0
INCOME VALUE		
PREVIOUS YEAR MKT VALUE		986,876

PERMIT NUM	DESCRIPTION	AMT	ISSUED
C1905989	CO ISSUED	0	12/13/2019
B1912425	SCRN ENCLSRE	0	12/04/2019
B1910845	SWIM POOL	71,200	10/15/2019
B1905989	NEW CONSTR	424,039	08/01/2019

SALES DATA

OFF RECORD Number	DATE	TYPE INST	Q / U	V / I	RSN CD	SALE PRICE
2681/1910	11/29/2023	WD	Q	I	02	1,160,000
GRANTOR: BROWNLEE AUDREY & TRA						
GRANTEE: REED DAVID H & REBE						
2331/0324	12/20/2019	WD	Q	I	01	759,100
GRANTOR: FF FLORIDA RESIDENTIA						
GRANTEE: BROWNLEE AUDREY H &						

BUILDING NOTES

BUILDING DIMENSIONS

FOP=[YR=2019] W31 N31 W11 BAS=[YR=2019] W18 S15 E18 N15$ S15 W18 S16 BAS=[YR=2019] S52 FGR=[YR=2019] S35 E23 N33 W16 N2 W7$ E7 S2 E16 N5 E7 FOP=[YR=2019] S3 E8 N3 W8$ E8 S7 D2 R4 E3 U2 R4 N6 E11 N41 U3 L3 W9 D3 L3 S8 W16 N11 W19 N6 W10$ E10 S6 E19 S11 E16 N8 U3 R3 E9 D3 R3 N9$.

EXTRA FEATURES

LN	OB/XF CODE	DESCRIPTION	BLD	CAP	L	W	UNITS	UT	Adj R	ADJ UNIT PRICE	ORIG COND	YEAR ON	YEAR ACTUAL	Q	% COND	OB/XF MKT VALUE	NOTES
1	0500	FP-PRE FAB	0	100	0	0	1.00	UT	3,500.00	3,500.00	100	2019	2019	3	98	3,430	
2	0600	SUMMER KIT	0	100	0	0	1.00	UT	10,000.00	10,000.00	100	2019	2019	3	82	8,200	
3	0855	CONC PAVER	0	100	0	0	1,746.00	SF	10.00	10.00	100	2019	2019	3	97	16,936	
4	0911	SCRN RM A	0	100	31	28	868.00	SF	17.50	17.50	100	2019	2019	3	82	12,456	
5	0861	POOL GUNIT	0	100	0	0	412.00	SF	102.00	102.00	100	2019	2019	3	87	36,561	
6	0855	CONC PAVER	0	100	0	0	456.00	SF	10.00	10.00	100	2019	2019	3	97	4,423	

LAND DESCRIPTION

TOTAL OB/XF 82,006

LN	USE CODE	CLS	LAND USE DESCRIPTION	CAP	RD	LOC ZONE	FRONT	DEPTH	TOT LND UTS	UNIT TYPE	DT	DPTH FACT	% COND	TOT ADJ	UNIT PRICE	ADJ UNIT PRICE	LAND VALUE	OTHER ADJUSTMENTS AND NOTES	YEAR	DENSITY	DECL	FRZ	YR	CONSRV
1	000135	C	RES NATURAL	100		PUD	0.00	0.00	1.00	LT		1.00	1.00	1.00	200,000.00	200,000.00	200,000							

REVIEW DATE 12/26/2019 BY KW Total Acres: 0.00 Total Land Value: 200,000 Market: 0 Agricultural: 0 Common: 200,000 PRINTED 07/30/2025 BY SYS