LOT 231
IN OR 2244/794
AMELIA NATIONAL #1B PB 7/191

TENARVITZ PAUL & LOU ANN
95081 SUGARBERRY CT
FERNANDINA BEACH, FL 32034

2025

26-2N-28-006A-0231-0000

BUILDING CHARACTERISTICS

ELEMENT	CD	CONSTRUCTION
Exterior Wall	10	ABOVE AVG 100
Roof Structur	08	IRREGULAR 100
Roof Cover	03	COMP SHNGL 100
Interior Wall	05	DRYWALL 100
Interior Floo	14	CARPET 60
Interior Floo	11	CLAY TILE 40
Air Condition	03	CENTRAL 100
Heating Type	04	AIR DUCTED 100
Bedrooms		4 100
Bathrooms		3.5 100
Frame	02	WOOD FRAME 100
Stories	2.	2. 100
Units		0 100
Occupancy	00	NONE 100
Quality	03	Quality Level 03
DOR CODE	0100	SINGLE FAMILY
MAP NUM		MKT AREA 04
NEIGHBORHOOD/LOC	4042.00	

AREA TYPE	TOTAL GROSS AREA	PCT OF BASE	YEAR	TOT ADJ AREA	SUBAREA MARKET VALUE
BAS	2,144	100	2018	2,144	342,429
FGR	252	55	2018	139	22,201
FGR	448	55	2018	246	39,290
FOP	69	30	2018	21	3,354
FOP	180	30	2021	54	8,625
FSP	252	40	2021	101	16,131
FUS	1,123	100	2018	1,123	179,360
PTO	122	5	2021	6	958
STR	48	10	2018	5	799
TOTALS	4,638			3,839	613,145

MARKET ADJUSTMENTS

TYPE	MDL	EFF. AREA	TOT ADJ PTS	EFF. BASE RATE	REPL. COST NEW	AYB	EYB	ECON	FNCT		NORM	% COND
0500	01	3,839	103.6800	163.81	628,867	2018	2018	0	0	0	2.50	97.50

1 SFR CUST – 100% - 2019 Heated Area: 3267 HX Base Yr 2019

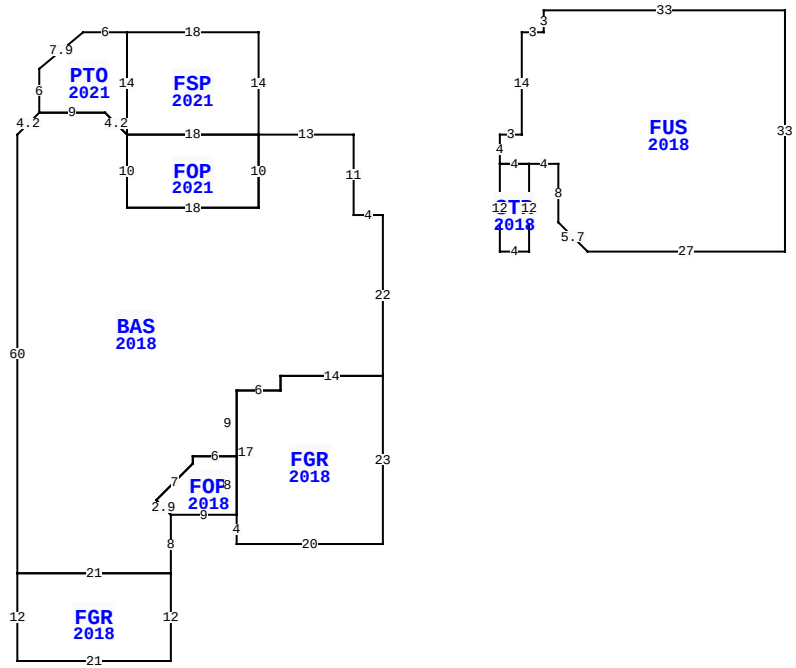

95081 SUGARBERRY CT, FERNANDINA BEACH

BLD DATE		LGL DATE	
XF DATE		LAND DATE	05/08/2025 MLU
INC DATE		AG DATE	

NASSAU COUNTY PROPERTY

PAGE 1 of 1 4

VALUATION SUMMARY

VALUATION BY		STANDARD
Tax Group: 4	Tax Dist:	
BUILDING MARKET VALUE		613,145
TOTAL MARKET OB/XF VALUE		7,520
TOTAL LAND VALUE - MARKET		135,000
TOTAL MARKET VALUE		755,665
SOH/AGL Deduction		273,422
ASSESSED VALUE		482,243
TOTAL EXEMPTION VALUE	HX HB	50,722
BASE TAXABLE VALUE		431,521
TOTAL JUST VALUE		755,665
NCON VALUE		0
INCOME VALUE		
PREVIOUS YEAR MKT VALUE		757,620

PERMIT NUM	DESCRIPTION	AMT	ISSUED
B2012411	ADDITION	25,000	12/11/2020
B1804463	CO ISSUED	0	12/19/2018
B1804463	NEW CONSTR	426,736	05/02/2018

SALES DATA

OFF RECORD Number	DATE	TYPE INST	Q / U	V / I	RSN CD	SALE PRICE
2244/0794	12/18/2018	WD	Q	I	02	484,000
GRANTOR: RIVERSIDE HOMES OF N						
GRANTEE: TENARVITZ PAUL & LO						
2132/0184	6/06/2017	SW	U	V	37	111,000
GRANTOR: WEEKLEY HOMES LP						
GRANTEE: RIVERSIDE HOMES OF						

BUILDING NOTES

EXTRA FEATURES

LN	OB/XF CODE	DESCRIPTION	BLD	CAP	L	W	UNITS	UT	Adj R	ADJ UNIT PRICE	ORIG COND	YEAR ON	YEAR ACTUAL	Q	% COND	OB/XF MKT VALUE	NOTES
1	0855	CONC PAVER	0	100	6	3	18.00	SF	10.00	10.00	100	2018	2018	3	97	175	
2	0855	CONC PAVER	0	100	0	0	400.00	SF	10.00	10.00	100	2018	2018	3	97	3,880	
3	0500	FP-PRE FAB	0	100	0	0	1.00	UT	3,500.00	3,500.00	100	2021	2021	3	99	3,465	

BUILDING DIMENSIONS

BAS=[YR=2018] W13 FSP=[YR=2021] N14 W18 PTO=[YR=2021] W6 D5 L6 S6 E9 D3 R3 N14$ S14 E18$ FOP=[YR=2021] W18 S10 E18 N10$ S10 W18 N10 U3 L3 W9 D3 L3 S60 FGR=[YR=2018] S12 E21 N12 W21$ E21 N8 FOP=[YR=2018] E9 FGR=[YR=2018] S4 E20 N23 W14 S2 W6 S17$ N8 W6 S1 L5 D5 D2 R2 $ U2 L2 U5 R5 N1 E6 N9 E6 N2 E14 N22 W4 N11$ PTR= E20FUS=[YR=2018] E3 N14 E3 N3 E33 S33 W27 U4 L4 N8 W4 STR=[YR=2018] S12W4 N12 E4$ W4 N4$ W20$.

LAND DESCRIPTION

TOTAL OB/XF 7,520

LN	USE CODE	CLS	LAND USE DESCRIPTION	CAP	RD	LOC ZONE	FRONT	DEPTH	TOT LND UTS	UNIT TYPE	DT	DPTH FACT	% COND	TOT ADJ	UNIT PRICE	ADJ UNIT PRICE	LAND VALUE	OTHER ADJUSTMENTS AND NOTES	YEAR	DENSITY	DECL	FRZ	YR	CONSRV
1	000134	C	RES POND	100		PUD	0.00	0.00	1.00	LT		1.00	1.00	1.00	135,000.00	135,000.00	135,000							

REVIEW DATE 03/15/2021 BY KW Total Acres: 0.00 Total Land Value: 135,000 Market: 0 Agricultural: 0 Common: 135,000 PRINTED 07/30/2025 BY SYS