LOT 147
AMELIA NATIONAL #1 PB 7/48

STOLL JENNIFER & KENNETH D
95046 SUNFLOWER CT
FERNANDINA BEACH, FL 32034

2025

26-2N-28-006A-0147-0000

BUILDING CHARACTERISTICS

ELEMENT	CD	CONSTRUCTION
Exterior Wall	16	WD FR STUC 90
Exterior Wall	21	STONE 10
Roof Structur	08	IRREGULAR 100
Roof Cover	03	COMP SHNGL 100
Interior Wall	05	DRYWALL 100
Interior Floo	14	CARPET 50
Interior Floo	15	HARDTILE 50
Air Condition	03	CENTRAL 100
Heating Type	04	AIR DUCTED 100
Bedrooms		4 100
Bathrooms		3 100
Frame	02	WOOD FRAME 100
Stories	1.	1. 100
Units		0 100
Occupancy	00	NONE 100
Quality	03	Quality Level 03
DOR CODE	0100	SINGLE FAMILY
MAP NUM		MKT AREA 04
NEIGHBORHOOD/LOC	4042.00	

AREA TYPE	TOTAL GROSS AREA	PCT OF BASE	YEAR	TOT ADJ AREA	SUBAREA MARKET VALUE
BAS	2,689	100	2006	2,689	351,828
FGR	774	55	2006	426	55,738
FOP	72	30	2006	22	2,878
FOP	195	30	2006	58	7,588
PTO	733	5	2009	37	4,841
TOTALS	4,463			3,232	422,874

MARKET ADJUSTMENTS

TYPE	MDL	EFF. AREA	TOT ADJ PTS	EFF. BASE RATE	REPL. COST NEW	AYB	EYB	ECON	FNCT		NORM	% COND
0900	01	3,232	108.9280	143.78	464,697	2006	2006	0	0	0	9.00	91.00

1 SNGL FAM – 100% - 2014 Heated Area: 2689 HX Base Yr 2014

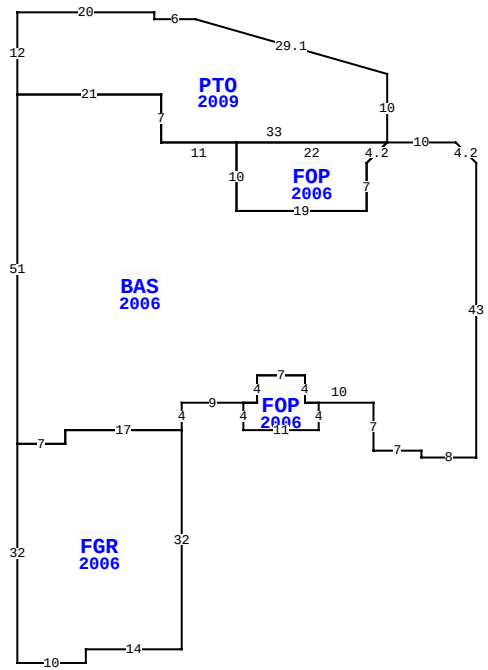

95046 SUNFLOWER CT, FERNANDINA BEACH

BLD DATE	05/13/2015 KK	LGL DATE	
XF DATE		LAND DATE	05/08/2025 MLU
INC DATE		AG DATE	

NASSAU COUNTY PROPERTY

PAGE 1 of 1 4

VALUATION SUMMARY

VALUATION BY		STANDARD
Tax Group: 4	Tax Dist:	
BUILDING MARKET VALUE		422,874
TOTAL MARKET OB/XF VALUE		22,415
TOTAL LAND VALUE - MARKET		200,000
TOTAL MARKET VALUE		645,289
SOH/AGL Deduction		316,340
ASSESSED VALUE		328,949
TOTAL EXEMPTION VALUE	HX HB	50,722
BASE TAXABLE VALUE		278,227
TOTAL JUST VALUE		645,289
NCON VALUE		0
INCOME VALUE		
PREVIOUS YEAR MKT VALUE		590,725

PERMIT NUM	DESCRIPTION	AMT	ISSUED
B22710	XFOB	4,000	07/01/2009
M11520	H/AC	0	05/01/2006
C17262	CO ISSUED	204,203	03/01/2006
E16978	NEW CONSTR	4,000	03/01/2006
R08996	REPAIR/RRF	5,600	03/01/2006
B17262	NEW CONSTR	204,203	03/01/2006

SALES DATA

OFF RECORD Number	DATE	TYPE INST	Q / U	V / I	RSN CD	SALE PRICE
2368/0585	6/09/2020	QC	U	I	11	100
GRANTOR: STOLL JENNIFER & KENN						
GRANTEE: STOLL JENNIFER & KE						
2042/0119	4/18/2016	QC	U	I	11	100
GRANTOR: STOLL KENNETH D						
GRANTEE: STOLL JENNIFER						

BUILDING NOTES

EXTRA FEATURES

LN	OB/XF CODE	DESCRIPTION	BLD	CAP	L	W	UNITS	UT	Adj R	ADJ UNIT PRICE	ORIG COND	YEAR ON	YEAR ACTUAL	Q	% COND	OB/XF MKT VALUE	NOTES
1	0500	FP-PRE FAB	0	100	0	0	1.00	UT	3,500.00	3,500.00	100	2006	2006	3	89	3,115	
2	0911	SCRN RM A	0	100	0	0	496.00	SF	17.50	17.50	100	2009	2009	3	35	3,038	
3	0855	CONC PAVER	0	100	0	0	1,787.00	SF	10.00	10.00	100	2011	2011	3	91	16,262	

BUILDING DIMENSIONS

BAS=[YR=2006] N43 L3 U3 W10PTO=[YR=2009] N10 U8 L28 W6 N1 W20 S12 E21 S7E33$ FOP=[YR=2006] W22S10E19 N7 R3 U3 $ D3 L3 S7 W19 N10W11 N7W21S51 FGR=[YR=2006] S32E10N2E14 N32W17S2W7$ E7N2E17N4 E9 FOP=[YR=2006] S4E11N4W2N4W7S4W2$ E2 N4E7S4E10S7E7S1E8$.

LAND DESCRIPTION

TOTAL OB/XF 22,415

LN	USE CODE	CLS	LAND USE DESCRIPTION	CAP	RD	LOC ZONE	FRONT	DEPTH	TOT LND UTS	UNIT TYPE	DT	DPTH FACT	% COND	TOT ADJ	UNIT PRICE	ADJ UNIT PRICE	LAND VALUE	OTHER ADJUSTMENTS AND NOTES	YEAR	DENSITY	DECL	FRZ	YR	CONSRV
1	000134	C	RES POND	100	0003	PUD	0.00	0.00	1.00	LT		1.00	1.00	1.00	200,000.00	200,000.00	200,000							

REVIEW DATE 05/12/2019 BY KBA Total Acres: 0.00 Total Land Value: 200,000 Market: 0 Agricultural: 0 Common: 200,000 PRINTED 07/30/2025 BY SYS