LOT 139
IN OR 2247/301
AMELIA NATIONAL #1 PB 7/48

HARGER KEITH & CAROLYN
95220 BERMUDA DRIVE
FERNANDINA BEACH, FL 32034

2025

26-2N-28-006A-0139-0000

BUILDING CHARACTERISTICS

ELEMENT	CD	CONSTRUCTION
Exterior Wall	31	HARDIE BRD 100
Roof Structur	08	IRREGULAR 100
Roof Cover	03	COMP SHNGL 100
Interior Wall	05	DRYWALL 100
Interior Floo	14	CARPET 60
Interior Floo	11	CLAY TILE 40
Air Condition	03	CENTRAL 100
Heating Type	04	AIR DUCTED 100
Bedrooms		5 100
Bathrooms		4 100
Frame	02	WOOD FRAME 100
Stories	2.	2. 100
Units		0 100
Occupancy	00	NONE 100
Quality	03	Quality Level 03
DOR CODE	0100	SINGLE FAMILY
MAP NUM		MKT AREA 04
NEIGHBORHOOD/LOC	4042.00	

AREA TYPE	TOTAL GROSS AREA	PCT OF BASE	YEAR	TOT ADJ AREA	SUBAREA MARKET VALUE
BAS	2,360	100	2018	2,360	380,217
FGR	448	55	2018	246	39,633
FOP	69	30	2018	21	3,383
FOP	180	30	2018	54	8,700
FUS	1,123	100	2018	1,123	180,926
STR	48	10	2018	5	805
TOTALS	4,228			3,809	613,664

MARKET ADJUSTMENTS

TYPE	MDL	EFF. AREA	TOT ADJ PTS	EFF. BASE RATE	REPL. COST NEW	AYB	EYB	ECON	FNCT		NORM	% COND
0500	01	3,809	104.5800	165.24	629,399	2018	2018	0	0	0	2.50	97.50

1 SFR CUST – 100% - 2019 Heated Area: 3483 HX Base Yr 2019

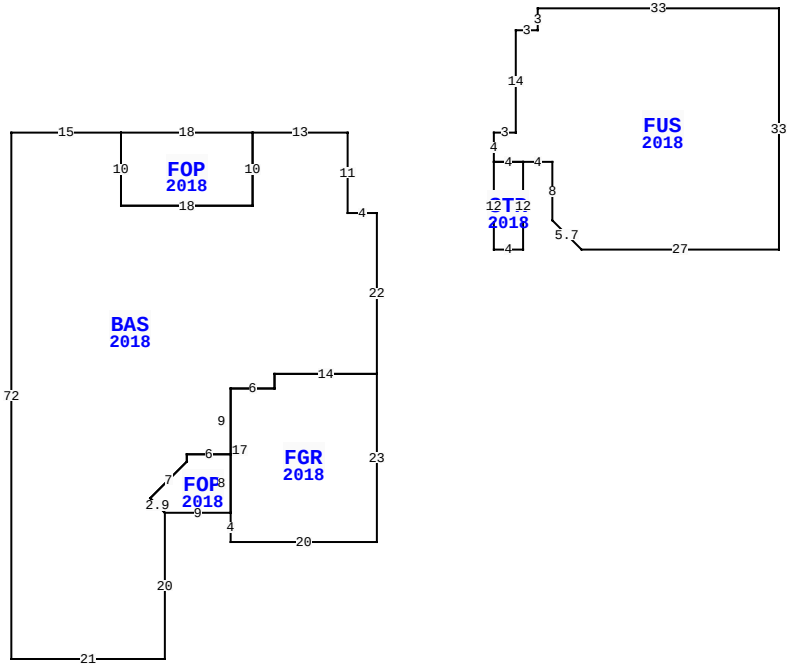

95220 BERMUDA DR, FERNANDINA BEACH

BLD DATE		LGL DATE	
XF DATE		LAND DATE	05/08/2025 MLU
INC DATE		AG DATE	

NASSAU COUNTY PROPERTY

PAGE 1 of 1 4

VALUATION SUMMARY

VALUATION BY		STANDARD
Tax Group: 4	Tax Dist:	
BUILDING MARKET VALUE		613,664
TOTAL MARKET OB/XF VALUE		48,653
TOTAL LAND VALUE - MARKET		135,000
TOTAL MARKET VALUE		797,317
SOH/AGL Deduction		384,263
ASSESSED VALUE		413,054
TOTAL EXEMPTION VALUE	HX HB	50,722
BASE TAXABLE VALUE		362,332
TOTAL JUST VALUE		797,317
NCON VALUE		0
INCOME VALUE		
PREVIOUS YEAR MKT VALUE		800,082

PERMIT NUM	DESCRIPTION	AMT	ISSUED
B2007628	SWIM POOL	18,000	10/01/2020
B1804462	CO ISSUED	0	12/31/2018
B1804462	NEW CONSTR	439,569	05/02/2018

SALES DATA

OFF RECORD Number	DATE	TYPE INST	Q U	V I	RSN CD	SALE PRICE
2247/0301	12/31/2018	WD	Q	I	01	426,400
GRANTOR: RIVERSIDE HOMES OF N						
GRANTEE: HARGER KEITH & CARO						
2132/0184	6/06/2017	SW	U	V	37	111,000
GRANTOR: WEEKLEY HOMES LP						
GRANTEE: RIVERSIDE HOMES OF						

BUILDING NOTES

BUILDING DIMENSIONS

BAS=[YR=2018] W13 FOP=[YR=2018] W18 S10 E18 N10$ S10 W18 N10 W15 S72 E21 N20 FOP=[YR=2018] E9 FGR=[YR=2018] S4 E20 N23 W14 S2 W6 S17$ N8 W6 S1 L5 D5 D2 R2 $ U2 L2 U5 R5 N1E6 N9 E6 N2 E14 N22 W4 N11$ PTR= E20 FUS=[YR=2018] E3 N14 E3 N3 E33 S33 W27 U4 L4 N8 W4 STR=[YR=2018] S12 W4 N12 E4$ W4 N4$ W20$.

EXTRA FEATURES

LN	OB/XF CODE	DESCRIPTION	BLD	CAP	L	W	UNITS	UT	Adj R	ADJ UNIT PRICE	ORIG COND	YEAR ON	YEAR ACTUAL	Q	% COND	OB/XF MKT VALUE	NOTES
1	0855	CONC PAVER	0	100	12	6	72.00	SF	10.00	10.00	100	2018	2018	3	97	698	
2	0855	CONC PAVER	0	100	55	16	880.00	SF	10.00	10.00	100	2018	2018	3	97	8,536	
3	0500	FP-PRE FAB	0	100	0	0	1.00	UT	3,500.00	3,500.00	100	2018	2018	3	98	3,430	
4	0866	POOL FIBER	0	100	28	12	336.00	SF	72.00	72.00	100	2021	2021	3	90	21,773	
5	0855	CONC PAVER	0	100	0	0	800.00	SF	10.00	10.00	100	2021	2021	3	99	7,920	
6	1076	TRELLIS A	0	100	10	18	180.00	SF	7.50	7.50	100	2021	2021	3	93	1,256	
7	0462	ST/AL FNC	0	100	120	0	480.00	SF	10.00	10.00	100	2021	2021	3	93	4,464	
8	0463	FENCE GATE	0	100	0	0	2.00	UT	300.00	300.00	100	2021	2021	3	96	576	

LAND DESCRIPTION

TOTAL OB/XF 48,653

LN	USE CODE	CLS	LAND USE DESCRIPTION	CAP	RD	LOC ZONE	FRONT	DEPTH	TOT LND UTS	UNIT TYPE	DT	DPTH FACT	% COND	TOT ADJ	UNIT PRICE	ADJ UNIT PRICE	LAND VALUE	OTHER ADJUSTMENTS AND NOTES	YEAR	DENSITY	DECL	FRZ	YR	CONSRV
1	000134	C	RES POND	100		PUD	0.00	0.00	1.00	LT		1.00	1.00	1.00	135,000.00	135,000.00	135,000							

REVIEW DATE 03/09/2021 BY KW Total Acres: 0.00 Total Land Value: 135,000 Market: 0 Agricultural: 0 Common: 135,000 PRINTED 07/30/2025 BY SYS