IN OR 2612/1887

ROWE GEORGE A & GAYLE M L/E/
614957 RIVER ROAD
CALLAHAN, FL 32011

2025

26-2N-24-0000-0007-0010

NASSAU COUNTY PROPERTY

BUILDING CHARACTERISTICS

ELEMENT	CD	CONSTRUCTION
Exterior Wall	19	COMMON BRK 100
Roof Structur	03	GABLE/HIP 100
Roof Cover	03	COMP SHNGL 100
Interior Wall	05	DRYWALL 90
Interior Wall	04	PLYWOOD 10
Interior Floo	08	SHT VINYL 90
Interior Floo	14	CARPET 10
Air Condition	03	CENTRAL 100
Heating Type	04	AIR DUCTED 100
Bedrooms		3 100
Bathrooms		2 100
Frame	02	WOOD FRAME 100
Stories	1.	1. 100
Units		0 100
BUD8 Adjustme	06	DIST 1D 100
Occupancy	00	NONE 100
Quality	04	Quality Level 04

DOR CODE 0100 SINGLE FAMILY

MAP NUM | MKT AREA 08

NEIGHBORHOOD/LOC 8001.00

AREA TYPE	TOTAL GROSS AREA	PCT OF BASE	YEAR	TOT ADJ AREA	SUBAREA MARKET VALUE
BAS	1,934	100	1993	1,934	197,786
FCP	484	25	1993	121	12,374
FEP	440	80	2008	352	35,998
FOP	160	30	1993	48	4,909
TOTALS	3,018			2,455	251,068

MARKET ADJUSTMENTS

TYPE	MDL	EFF. AREA	TOT ADJ PTS	EFF. BASE RATE	REPL. COST NEW	AYB	EYB	ECON	FNCT		NORM	% COND
0900	01	2,455	122.9760	162.33	398,520	1970	1970	0	0	0	37.00	63.00

1 SNGL FAM – 100% - 0 Heated Area: 1934 HX Base Yr

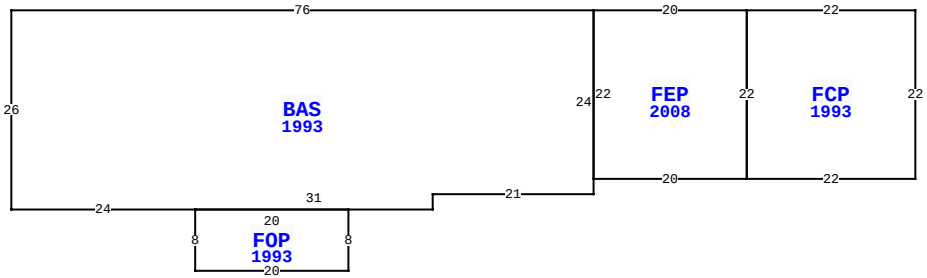

614957 RIVER RD, CALLAHAN

BLD DATE		LGL DATE	
XF DATE		LAND DATE	05/09/2025 MLU
INC DATE		AG DATE	

VALUATION SUMMARY

VALUATION BY		STANDARD
Tax Group: 6	Tax Dist:	
BUILDING MARKET VALUE		272,227
TOTAL MARKET OB/XF VALUE		34,519
TOTAL LAND VALUE - MARKET		49,000
TOTAL MARKET VALUE		355,746
SOH/AGL Deduction		192,662
ASSESSED VALUE		163,084
TOTAL EXEMPTION VALUE	HX HB	50,722
BASE TAXABLE VALUE		112,362
TOTAL JUST VALUE		355,746
NCON VALUE		0
INCOME VALUE		
PREVIOUS YEAR MKT VALUE		336,002

PERMIT NUM	DESCRIPTION	AMT	ISSUED
B21944	XFOB	3,838	09/01/2008
5705	REPAIR/RRF	3,400	05/05/1989

SALES DATA

OFF RECORD Number	DATE	TYPE INST	Q / U	V / I	RSN CD	SALE PRICE
2612/1887	1/09/2023	WD	U	I	11	100
GRANTOR: ROWE GEORGE A & GAYLE						
GRANTEE: HYATT DON LYNN & SH						
2138/0589	8/07/2017	QC	U	I	11	100
GRANTOR: ROWE STACY MICHELLE						
GRANTEE: ROWE GEORGE ALFRED						

BUILDING NOTES

BUILDING DIMENSIONS

FCP=[YR=1993] W22 FEP=[YR=2008] W20 BAS=[YR=1993] W76 S26 E24 FOP=[YR=1993] S8 E20 N8 W20$ E31 N2 E21 N24$ S22 E20 N22$ S22 E22 N22$.

EXTRA FEATURES

LN	OB/XF CODE	DESCRIPTION	BLD	CAP	L	W	UNITS	UT	Adj R	ADJ UNIT PRICE	ORIG COND	YEAR ON	YEAR ACTUAL	Q	% COND	OB/XF MKT VALUE	NOTES
1	0811	CONCRETE B	0	100	0	0	1,794.00	SF	5.20	5.20	100	1980	1980	3	30	2,799	
2	0510	GARAGE WD-	0	100	18	18	324.00	SF	35.00	35.00	100	1980	1980	3	20	2,268	
3	0500	FP-PRE FAB	0	100	0	0	1.00	UT	3,500.00	3,500.00	100	1980	1980	3	44	1,540	
4	0940	SHEDS/PORT	0	100	10	12	120.00	SF	30.00	30.00	100	1980	1980	3	20	720	
5	0861	POOL GUNIT	0	100	19	31	589.00	SF	85.00	85.00	100	1980	1980	3	20	10,013	
6	0845	KOOL DECK	0	100	0	0	923.00	SF	7.25	7.25	100	1980	1980	3	30	2,008	
7	0940	SHEDS/PORT	0	100	7	13	91.00	SF	30.00	30.00	100	1980	1980	3	20	546	
8	0350	CARPORT WD	0	0	10	12	120.00	SF	13.00	13.00	100	1980	1980	3	20	312	
9	0811	CONCRETE B	0	100	0	0	510.00	SF	5.20	5.20	100	1990	1990	3	57	1,512	
10	0810	CONCRETE A	0	0	0	0	560.00	SF	4.88	4.88	100	1990	1990	3	57	1,556	

TOTAL OB/XF 23,274

LAND DESCRIPTION

LN	USE CODE	CLS	LAND USE DESCRIPTION	CAP	RD	LOC ZONE	FRONT	DEPTH	TOT LND UTS	UNIT TYPE	DT	DPTH FACT	% COND	TOT ADJ	UNIT PRICE	ADJ UNIT PRICE	LAND VALUE	OTHER ADJUSTMENTS AND NOTES	YEAR	DENSITY	DECL	FRZ	YR	CONSRV
1	000100	C	RES	100	0004	OR	0.00	0.00	2.00	AC		1.00	1.00	0.70	35,000.00	24,500.00	49,000							

REVIEW DATE 08/05/2021 BY TWA Total Acres: 2.00 Total Land Value: 49,000 Market: 0 Agricultural: 0 Common: 49,000 PRINTED 07/30/2025 BY SYS

IN OR 2612/1887

ROWE GEORGE A & GAYLE M L/E/
614957 RIVER ROAD
CALLAHAN, FL 32011

2025

26-2N-24-0000-0007-0010

BUILDING CHARACTERISTICS

ELEMENT	CD	CONSTRUCTION
Exterior Wall	25	MOD METAL 100
Roof Structur	03	GABLE/HIP 100
Roof Cover	01	MINIMUM 100
Interior Wall	04	PLYWOOD 100
Interior Floo	14	CARPET 70
Interior Floo	08	SHT VINYL 30
Air Condition	03	CENTRAL 100
Heating Type	04	AIR DUCTED 100
Bedrooms		2 100
Bathrooms		1 100
Frame	02	WOOD FRAME 100
Stories	1.	1. 100
Units		0 100
Quality	03	Quality Level 03
DOR CODE	0100	SINGLE FAMILY
MAP NUM		MKT AREA 08
NEIGHBORHOOD/LOC	8001.00	

AREA TYPE	TOTAL GROSS AREA	PCT OF BASE	YEAR	TOT ADJ AREA	SUBAREA MARKET VALUE
BAS	880	100	2008	880	20,022
UOP	200	25	2008	50	1,138
TOTALS	1,080			930	21,159

MARKET ADJUSTMENTS

TYPE	MDL	EFF. AREA	TOT ADJ PTS	EFF. BASE RATE	REPL. COST NEW	AYB	EYB	ECON	FNCT		NORM	% COND
0820	02	930	94.8000	75.84	70,531	1975	1975	0	0	0	70.00	30.00

2 M/H 93- – 0% - 0 Heated Area: 880 HX Base Yr

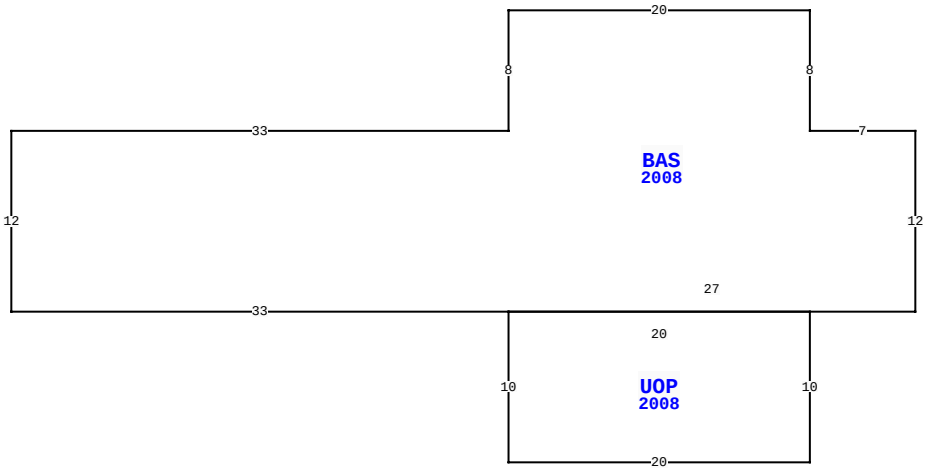

614957 RIVER RD, CALLAHAN

BLD DATE		LGL DATE	
XF DATE		LAND DATE	05/09/2025 MLU
INC DATE		AG DATE	

NASSAU COUNTY PROPERTY

PAGE 2 of 3 6

VALUATION SUMMARY

VALUATION BY		STANDARD
Tax Group: 6	Tax Dist:	
BUILDING MARKET VALUE		272,227
TOTAL MARKET OB/XF VALUE		34,519
TOTAL LAND VALUE - MARKET		49,000
TOTAL MARKET VALUE		355,746
SOH/AGL Deduction		192,662
ASSESSED VALUE		163,084
TOTAL EXEMPTION VALUE	HX HB	50,722
BASE TAXABLE VALUE		112,362
TOTAL JUST VALUE		355,746
NCON VALUE		0
INCOME VALUE		
PREVIOUS YEAR MKT VALUE		336,002

PERMIT NUM	DESCRIPTION	AMT	ISSUED

SALES DATA

OFF RECORD Number	DATE	TYPE INST	Q / U	V / I	RSN CD	SALE PRICE
2612/1887	1/09/2023	WD	U	I	11	100
GRANTOR: ROWE GEORGE A & GAYLE						
GRANTEE: HYATT DON LYNN & SH						
2138/0589	8/07/2017	QC	U	I	11	100
GRANTOR: ROWE STACY MICHELLE						
GRANTEE: ROWE GEORGE ALFRED						

BUILDING NOTES

BUILDING DIMENSIONS

BAS=[YR=2008] W7 N8 W20 S8 W33 S12 E33 UOP=[YR=2008] S10 E20 N10 W20$ E27 N12$.

EXTRA FEATURES

LN	OB/XF CODE	DESCRIPTION	BLD	CAP	L	W	UNITS	UT	Adj R	ADJ UNIT PRICE	ORIG COND	YEAR ON	YEAR ACTUAL	Q	% COND	OB/XF MKT VALUE	NOTES
11	1242	WD DECK A	0	100	14	15	210.00	SF	10.00	10.00	100	1998	1998	3	20	420	
12	1076	TRELLIS A	0	100	12	15	180.00	SF	5.63	5.63	100	1998	1998	3	20	203	
13	1076	TRELLIS A	0	100	8	9	72.00	SF	5.63	5.63	100	1998	1998	3	20	81	
14	1076	TRELLIS A	0	100	8	6	48.00	SF	5.63	5.63	100	1998	1998	3	20	54	
15	1076	TRELLIS A	0	100	0	0	126.00	SF	5.63	5.63	100	1998	1998	3	20	142	
16	0855	CONC PAVER	0	100	0	0	311.00	SF	7.00	7.00	100	1998	1998	3	73	1,589	
17	1127	BRICK 8"	0	100	1	1	1.00	SF	11.00	11.00	100	1970	1970	3	54	6	
18	0476	VF 6 SBPL	0	100	0	0	95.00	LF	32.00	32.00	100	2002	2002	3	55	1,672	
19	0479	VF PICKET	0	100	0	0	90.00	LF	10.00	10.00	100	2002	2002	3	55	495	
20	0479	VF PICKET	0	100	0	0	25.00	LF	10.00	10.00	100	2000	2000	3	48	120	

TOTAL OB/XF 4,782

LAND DESCRIPTION

LN	USE CODE	CLS	LAND USE DESCRIPTION	CAP	RD	LOC ZONE	FRONT	DEPTH	TOT LND UTS	UNIT TYPE	DT	DPTH FACT	% COND	TOT ADJ	UNIT PRICE	ADJ UNIT PRICE	LAND VALUE	OTHER ADJUSTMENTS AND NOTES	YEAR	DENSITY	DECL	FRZ	YR	CONSRV

REVIEW DATE 08/05/2021 BY TWA Total Acres: 2.00 Total Land Value: 49,000 Market: 0 Agricultural: 0 Common: 49,000 PRINTED 07/30/2025 BY SYS

IN OR 2612/1887

ROWE GEORGE A & GAYLE M L/E/
614957 RIVER ROAD
CALLAHAN, FL 32011

2025

26-2N-24-0000-0007-0010

BUILDING CHARACTERISTICS

ELEMENT	CD	CONSTRUCTION

DOR CODE	0100	SINGLE FAMILY	
MAP NUM		MKT AREA	08
NEIGHBORHOOD/LOC	8001.00		

AREA TYPE	TOTAL GROSS AREA	PCT OF BASE	YEAR	TOT ADJ AREA	SUBAREA MARKET VALUE
TOTALS					

MARKET ADJUSTMENTS

TYPE	MDL	EFF. AREA	TOT ADJ PTS	EFF. BASE RATE	REPL. COST NEW	AYB	EYB	ECON	FNCT		NORM	% COND

BLD DATE		LGL DATE	
XF DATE		LAND DATE	05/09/2025 MLU
INC DATE		AG DATE	

NASSAU COUNTY PROPERTY

PAGE 3 of 3 6

VALUATION SUMMARY

VALUATION BY		STANDARD
Tax Group: 6	Tax Dist:	
BUILDING MARKET VALUE		272,227
TOTAL MARKET OB/XF VALUE		34,519
TOTAL LAND VALUE - MARKET		49,000
TOTAL MARKET VALUE		355,746
SOH/AGL Deduction		192,662
ASSESSED VALUE		163,084
TOTAL EXEMPTION VALUE	HX HB	50,722
BASE TAXABLE VALUE		112,362
TOTAL JUST VALUE		355,746
NCON VALUE		0
INCOME VALUE		
PREVIOUS YEAR MKT VALUE		336,002

PERMIT NUM	DESCRIPTION	AMT	ISSUED

SALES DATA

OFF RECORD Number	DATE	TYPE INST	Q / U	V / I	RSN CD	SALE PRICE
2612/1887	1/09/2023	WD	U	I	11	100
GRANTOR: ROWE GEORGE A & GAYLE						
GRANTEE: HYATT DON LYNN & SH						
2138/0589	8/07/2017	QC	U	I	11	100
GRANTOR: ROWE STACY MICHELLE						
GRANTEE: ROWE GEORGE ALFRED						

BUILDING NOTES

BUILDING DIMENSIONS

EXTRA FEATURES

LN	OB/XF CODE	DESCRIPTION	BLD	CAP	L	W	UNITS	UT	Adj R	ADJ UNIT PRICE	ORIG COND	YEAR ON	YEAR ACTUAL	Q	% COND	OB/XF MKT VALUE	NOTES
21	0479	VF PICKET	0	100	0	0	48.00	LF	10.00	10.00	100	2008	2008	3	72	346	
22	0510	GARAGE WD-	0	100	20	18	360.00	SF	35.00	35.00	100	2008	2008	3	48	6,048	
23	0810	CONCRETE A	0	100	6	2	12.00	SF	6.50	6.50	100	2008	2008	3	88	69	

LAND DESCRIPTION

TOTAL OB/XF 6,463

LN	USE CODE	CLS	LAND USE DESCRIPTION	CAP	RD	LOC ZONE	FRONT	DEPTH	TOT LND UTS	UNIT TYPE	DT	DPTH FACT	% COND	TOT ADJ	UNIT PRICE	ADJ UNIT PRICE	LAND VALUE	OTHER ADJUSTMENTS AND NOTES	YEAR	DENSITY	DECL	FRZ	YR	CONSRV

REVIEW DATE 08/05/2021 BY TWA Total Acres: 2.00 Total Land Value: 49,000 Market: 0 Agricultural: 0 Common: 49,000 PRINTED 07/30/2025 BY SYS