LOT 177
FLORA PARKE 2B PB 6/255

BERNER GEORGE E L/E/
23543 FLORA PARKE BLVD
FERNANDINA BEACH, FL 32034

2025

25-2N-28-0550-0177-0000

BUILDING CHARACTERISTICS

ELEMENT	CD	CONSTRUCTION
Exterior Wall	16	WD FR STUC 100
Roof Structur	03	GABLE/HIP 100
Roof Cover	03	COMP SHNGL 100
Interior Wall	05	DRYWALL 100
Interior Floo	13	LVT/LAMNT 70
Interior Floo	14	CARPET 30
Air Condition	03	CENTRAL 100
Heating Type	04	AIR DUCTED 100
Bedrooms		4 100
Bathrooms		2 100
Frame	02	WOOD FRAME 100
Stories	1.	1. 100
Units		0 100
Occupancy	00	NONE 100
Quality	03	Quality Level 03
DOR CODE	0100	SINGLE FAMILY
MAP NUM		MKT AREA 04
NEIGHBORHOOD/LOC	4041.00	

AREA TYPE	TOTAL GROSS AREA	PCT OF BASE	YEAR	TOT ADJ AREA	SUBAREA MARKET VALUE
BAS	2,159	100	2004	2,159	267,155
FEP	200	80	2004	160	19,798
FEP	275	80	2020	220	27,223
FGR	662	55	2004	364	45,041
FOP	88	30	2004	26	3,217
TOTALS	3,384			2,929	362,434

MARKET ADJUSTMENTS

TYPE	MDL	EFF. AREA	TOT ADJ PTS	EFF. BASE RATE	REPL. COST NEW	AYB	EYB	ECON	FNCT		NORM	% COND
0900	01	2,929	101.8960	134.50	393,950	2004	2008	0	0	0	8.00	92.00

1 SNGL FAM – 100% - 2018 Heated Area: 2159 HX Base Yr 2018

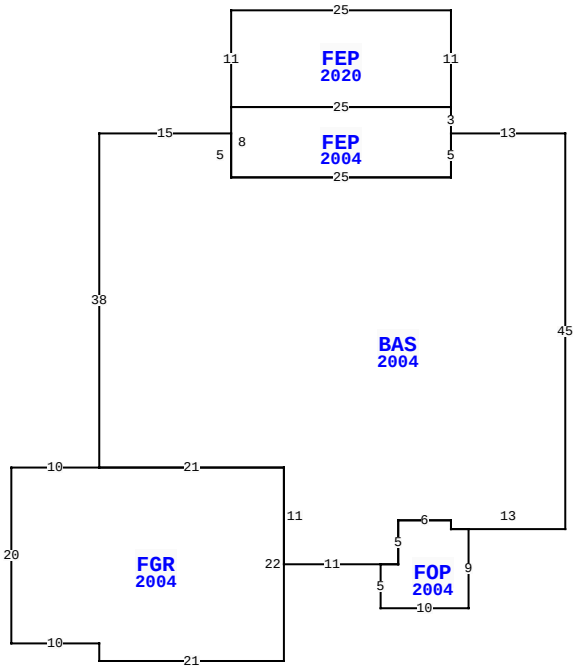

23543 FLORA PARKE BLVD, FERNANDINA BEACH

BLD DATE		LGL DATE	
XF DATE		LAND DATE	04/23/2025 MLU
INC DATE		AG DATE	

NASSAU COUNTY PROPERTY

PAGE 1 of 1 4

VALUATION SUMMARY

VALUATION BY		STANDARD
Tax Group: 4	Tax Dist:	
BUILDING MARKET VALUE		362,434
TOTAL MARKET OB/XF VALUE		10,991
TOTAL LAND VALUE - MARKET		85,000
TOTAL MARKET VALUE		458,425
SOH/AGL Deduction		171,186
ASSESSED VALUE		287,239
TOTAL EXEMPTION VALUE	HX HB	50,722
BASE TAXABLE VALUE		236,517
TOTAL JUST VALUE		458,425
NCON VALUE		0
INCOME VALUE		
PREVIOUS YEAR MKT VALUE		431,369

PERMIT NUM	DESCRIPTION	AMT	ISSUED
R2011621	REPAIR/RRF	15,000	11/24/2020
B1908507	SCRN ROOM	33,960	10/01/2019
B1907894	(9) WNDOWS	3,625	09/01/2019

SALES DATA

OFF RECORD Number	DATE	TYPE INST	Q / U	V / I	RSN CD	SALE PRICE
2621/1824	2/23/2023	QC	U	I	11	100
GRANTOR: BERNER GEORGE E						
GRANTEE: BERNER GEORGE E & E						
2119/0268	5/05/2017	WD	Q	I	01	279,000
GRANTOR: KARAPIN GISELA M						
GRANTEE: BERNER GEORGE E						

BUILDING NOTES

BUILDING DIMENSIONS

BAS=[YR=2004] W13 FEP=[YR=2004] N3 FEP=[YR=2020] N11 W25 S11 E25 $ W25 S8 E25 N5 $ S5 W25 N5 W15 S38 FGR=[YR=2004] W10 S20 E10 S2 E21 N22 W21 $ E21 S11 E11 FOP=[YR=2004] S5 E10 N9 W2 N1 W6 S5 W2 $ E2 N5 E6 S1 E13 N45 $.

EXTRA FEATURES

LN	OB/XF CODE	DESCRIPTION	BLD	CAP	L	W	UNITS	UT	Adj R	ADJ UNIT PRICE	ORIG COND	YEAR ON	YEAR ACTUAL	Q	% COND	OB/XF MKT VALUE	NOTES
1	0812	CONCRETE C	0	100	0	0	1,100.00	SF	4.00	4.00	100	2004	2004	3	83	3,652	
2	0471	VINYL FNC	0	100	0	0	220.00	LF	32.00	32.00	100	2004	2004	3	61	4,294	
3	0500	FP-PRE FAB	0	100	0	0	1.00	UT	3,500.00	3,500.00	100	2004	2004	3	87	3,045	

LAND DESCRIPTION

TOTAL OB/XF 10,991

LN	USE CODE	CLS	LAND USE DESCRIPTION	CAP	RD	LOC ZONE	FRONT	DEPTH	TOT LND UTS	UNIT TYPE	DT	DPTH FACT	% COND	TOT ADJ	UNIT PRICE	ADJ UNIT PRICE	LAND VALUE	OTHER ADJUSTMENTS AND NOTES	YEAR	DENSITY	DECL	FRZ	YR	CONSRV
1	000100	C	RES	100		PUD	0.00	0.00	1.00	LT		1.00	1.00	1.00	85,000.00	85,000.00	85,000							

REVIEW DATE 02/16/2021 BY KWX Total Acres: 0.00 Total Land Value: 85,000 Market: 0 Agricultural: 0 Common: 85,000 PRINTED 07/30/2025 BY SYS