LOT 63
IN OR 2063/883
FLORA PARKE PB 6/137-139

MCNAMEE MARGARET R/HASKEW ROBERT E
23982 FLORA PARKE BLVD
FERNANDINA BEACH, FL 32034

2025

25-2N-28-0550-0063-0000

BUILDING CHARACTERISTICS

ELEMENT	CD	CONSTRUCTION
Exterior Wall	16	WD FR STUC 100
Roof Structur	03	GABLE/HIP 100
Roof Cover	03	COMP SHNGL 100
Interior Wall	05	DRYWALL 100
Interior Floo	14	CARPET 70
Interior Floo	11	CLAY TILE 30
Air Condition	03	CENTRAL 100
Heating Type	04	AIR DUCTED 100
Bedrooms		4 100
Bathrooms		2 100
Frame	02	WOOD FRAME 100
Stories	1.	1. 100
Units		0 100
Occupancy	00	NONE 100
Quality	03	Quality Level 03
DOR CODE	0100	SINGLE FAMILY
MAP NUM		MKT AREA 04
NEIGHBORHOOD/LOC	4041.00	

AREA TYPE	TOTAL GROSS AREA	PCT OF BASE	YEAR	TOT ADJ AREA	SUBAREA MARKET VALUE
BAS	2,069	100	2000	2,069	261,201
FGR	436	55	2000	240	30,298
FOP	51	30	2000	15	1,894
FSP	228	40	2001	91	11,488
TOTALS	2,784			2,415	304,881

MARKET ADJUSTMENTS

TYPE	MDL	EFF. AREA	TOT ADJ PTS	EFF. BASE RATE	REPL. COST NEW	AYB	EYB	ECON	FNCT		NORM	% COND
0900	01	2,415	108.6820	143.46	346,456	2000	2000	0	0	0	12.00	88.00

1 SNGL FAM – 100% - 2017 Heated Area: 2069 HX Base Yr 2017

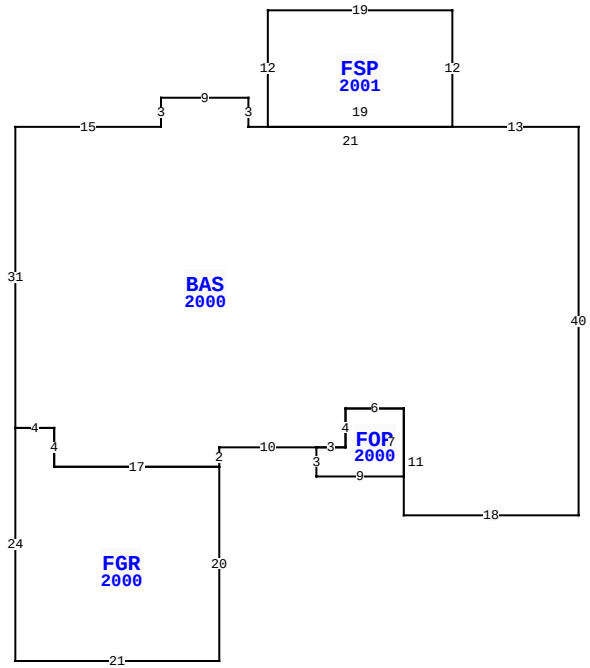

23982 FLORA PARKE BLVD, FERNANDINA BEACH

BLD DATE		LGL DATE	
XF DATE		LAND DATE	04/23/2025 MLU
INC DATE		AG DATE	

NASSAU COUNTY PROPERTY

PAGE 1 of 1 4

VALUATION SUMMARY

VALUATION BY		STANDARD
Tax Group: 4	Tax Dist:	
BUILDING MARKET VALUE		304,881
TOTAL MARKET OB/XF VALUE		21,760
TOTAL LAND VALUE - MARKET		85,000
TOTAL MARKET VALUE		411,641
SOH/AGL Deduction		158,475
ASSESSED VALUE		253,166
TOTAL EXEMPTION VALUE	HX HB	50,722
BASE TAXABLE VALUE		202,444
TOTAL JUST VALUE		411,641
NCON VALUE		0
INCOME VALUE		
PREVIOUS YEAR MKT VALUE		388,401

PERMIT NUM	DESCRIPTION	AMT	ISSUED
B16141	XFOB	6,310	09/01/2005
B0515728	SWIM POOL	21,350	01/01/2005
E0179147	NEW CONSTR	300	04/01/2001
B0007187	NEW CONSTR	100,000	06/01/2000

SALES DATA

OFF RECORD Number	DATE	TYPE INST	Q U	V I	RSN CD	SALE PRICE
2063/0883	8/01/2016	QC	U	I	11	83,500
GRANTOR: MCNAMEE MARGARET R						
GRANTEE: MCNAMEE MARGARET &						
1524/1744	9/13/2007	QC	Q	I	01	100
GRANTOR: MCNAMEE MICHAEL E						
GRANTEE: MCNAMEE MARGARET R						

BUILDING NOTES

BUILDING DIMENSIONS

BAS=[YR=2000] W13 FSP=[YR=2001] N12 W19 S12 E19 $ W21 N3 W9 S3 W15 S31 FGR=[YR=2000] S24 E21 N20 W17 N4 W4 $ E4 S4 E17 N2 E10 FOP=[YR=2000] S3 E9 N7W6 S4 W3 $ E3 N4 E6 S11 E18 N40 $.

EXTRA FEATURES

LN	OB/XF CODE	DESCRIPTION	BLD	CAP	L	W	UNITS	UT	Adj R	ADJ UNIT PRICE	ORIG COND	YEAR ON	YEAR ACTUAL	Q	% COND	OB/XF MKT VALUE	NOTES
1	0845	KOOL DECK	0	100	0	0	491.00	SF	7.25	7.25	100	2005	2005	3	84	2,990	
2	0911	SCRN RM A	0	100	25	32	800.00	SF	17.50	17.50	100	2005	2005	3	22	3,080	
3	0500	FP-PRE FAB	0	100	0	0	1.00	UT	3,500.00	3,500.00	100	2000	2000	3	83	2,905	
4	0811	CONCRETE B	0	100	0	0	1,017.00	SF	5.20	5.20	100	2000	2000	3	77	4,072	
5	0476	VF 6 SBPL	0	100	0	0	180.00	LF	32.00	32.00	100	2001	2001	3	52	2,995	
6	0470	VNYL GATE	0	100	0	0	1.00	UT	300.00	300.00	100	2001	2001	3	52	156	
7	0862	POOL VINYL	0	100	0	0	309.00	SF	50.00	50.00	100	2005	2005	3	36	5,562	

LAND DESCRIPTION

TOTAL OB/XF 21,760

LN	USE CODE	CLS	LAND USE DESCRIPTION	CAP	RD	LOC ZONE	FRONT	DEPTH	TOT LND UTS	UNIT TYPE	DT	DPTH FACT	% COND	TOT ADJ	UNIT PRICE	ADJ UNIT PRICE	LAND VALUE	OTHER ADJUSTMENTS AND NOTES	YEAR	DENSITY	DECL	FRZ	YR	CONSRV
1	000100	C	RES	100		PUD	0.00	0.00	1.00	LT		1.00	1.00	1.00	85,000.00	85,000.00	85,000							

REVIEW DATE 01/06/2023 BY DJA Total Acres: 0.00 Total Land Value: 85,000 Market: 0 Agricultural: 0 Common: 85,000 PRINTED 07/30/2025 BY SYS