PT SW1/4 OF NW1/4 OF
SEC 25-2N-28E PT OR 2209/631
BEING "SHOPPING CENTER OPTION

NNN YULEE FL OWNER LP/
420 S ORANGE AVE STE #400
ORLANDO, FL 32801

2025

25-2N-28-0000-0002-1170

NASSAU COUNTY PROPERTY

BUILDING CHARACTERISTICS

ELEMENT	CD	CONSTRUCTION
Exterior Wall	17	CB STUCCO 100
Roof Structur	09	RIDGE FRME 100
Roof Cover	04	BUILT-UP 100
Interior Wall	05	DRYWALL 100
Interior Floo	14	CARPET 80
Interior Floo	11	CLAY TILE 20
Ceiling	01	FIN.SUSPD 100
Air Condition	04	ROOF TOP 100
Heating Type	04	AIR DUCTED 100
Fixtures		15 100
Frame	05	STEEL 100
Story Height		16 100
RMS		8 100
Stories	1.	1. 100
Units		0 100
Occupancy	UN	UNKNOWN 100
Quality	03	Quality Level 03
DOR CODE	1600	COMMUNITY SHOPPING
MAP NUM		MKT AREA 04
NEIGHBORHOOD/LOC	4002.00	

AREA TYPE	TOTAL GROSS AREA	PCT OF BASE	YEAR	TOT ADJ AREA	SUBAREA MARKET VALUE
AOF	202	100	2012	202	13,616
AOF	472	100	2012	472	31,814
BAS	195	100	2012	195	13,144
BAS	49,417	100	2012	49,417	3,330,844
FOP	201	30	2012	60	4,044
SDA	56	110	2012	62	4,179
SPA	5,040	85	2012	4,284	288,754
STR	37	10	2012	4	269
ULP	3,441	15	2012	516	34,780
TOTALS	59,061			55,212	3,721,443

MARKET ADJUSTMENTS

TYPE	MDL	EFF. AREA	TOT ADJ PTS	EFF. BASE RATE	REPL. COST NEW	AYB	EYB	ECON	FNCT	AP	NORM	% COND
1304	04	55,212	101.4790	124.82	6,891,562	2012	2012	0	0	40	6.00	54.00

1 DEPT STORE – 0% - 2023 Heated Area: 54626 HX Base Yr

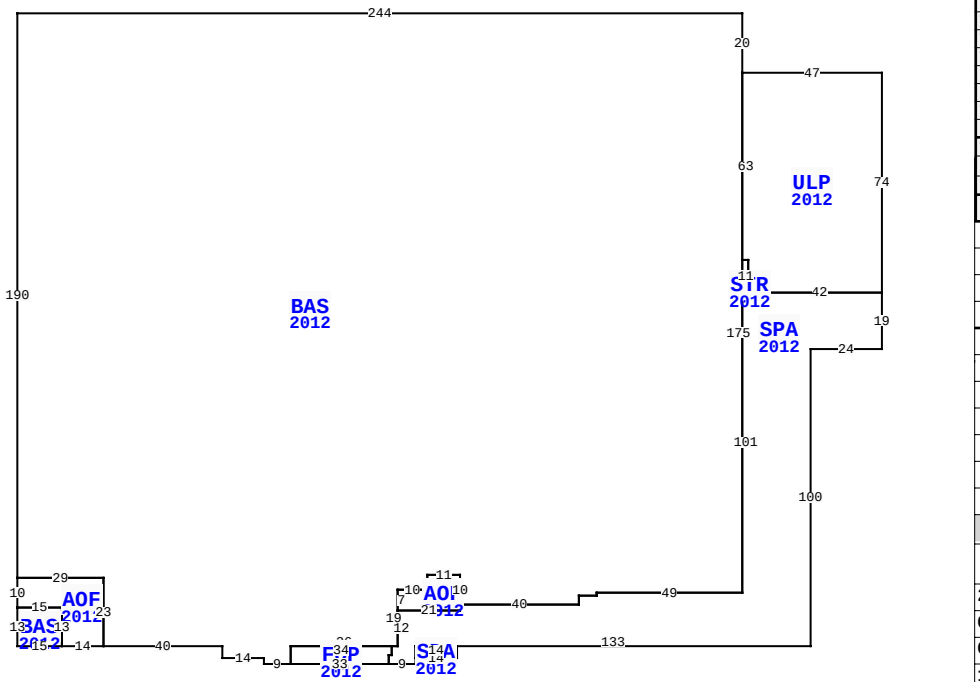

463893 SR 200, YULEE

BLD DATE			LGL DATE		
XF DATE	04/09/2025	KW	LAND DATE	04/25/2025	DC
INC DATE	05/13/2025	REA	AG DATE		

VALUATION SUMMARY

VALUATION BY	DIRECT_CAP
Tax Group: 4	Tax Dist:
BUILDING MARKET VALUE	4,792,682
TOTAL MARKET OB/XF VALUE	0
TOTAL LAND VALUE - MARKET	0
TOTAL MARKET VALUE	4,792,682
SOH/AGL Deduction	227,682
ASSESSED VALUE	4,565,000
TOTAL EXEMPTION VALUE	0
BASE TAXABLE VALUE	4,565,000
TOTAL JUST VALUE	4,792,682
NCON VALUE	0
INCOME VALUE	4,792,682
PREVIOUS YEAR MKT VALUE	4,150,000

KOHL'S DEPARTMENT STORE

PERMIT NUM	DESCRIPTION	AMT	ISSUED
B1226672	CO ISSUED	0	06/19/2013
C25035	CO ISSUED	0	02/03/2012
E24810	ELEC OTHER	0	02/01/2012
E24510	REMODEL	0	01/01/2012
E24524	NEW CONSTR	0	01/01/2012
E24606	NEW CONSTR	0	01/01/2012

SALES DATA

OFF RECORD Number	DATE	TYPE INST	Q U	V I	RSN CD	SALE PRICE
2209/0631	6/07/2018	SW	Q	I	05	26,152,500
GRANTOR: PX AMELIA LP						
GRANTEE: NNN YULEE FL OWNER						
1865/0383	6/27/2013	SW	Q	I	05	20,905,300
GRANTOR: VILLAGES OF AMELIA LL						
GRANTEE: PX AMELIA LP						

BUILDING NOTES

BUILDING DIMENSIONS

ULP=[YR=2012] W47 BAS=[YR=2012] N20 W244 S190 AOF=[YR=2012] S10 BAS=[YR=2012] S13 E15 N13 W15$ E15 S13 E14 N23 W29$ E29 S23 E40 S4 E14 S2 E9 FOP=[YR=2012] E33 SPA=[YR=2012] E9 N2 SDA=[YR=2012] E14 N4 W14 S4$ N4 E133 N100 E24 N19 W42 STR=[YR=2012] N5 W3 N6 W2 S11 E5$ W5 S101 W49 S1 W6 S3 W40 AOF=[YR=2012] N10 W11 S5 W10 S7 E21 N2$ S2 W21 S12 W2 S3 W1 S3$ N3 E1 N3 W34 S6$ N6 E36 N19 E10 N5 E11 S10 E40 N3 E6 N1 E49 N175$ S63 E2 S6 E3 S5 E42 N74$.

EXTRA FEATURES

LN	OB/XF CODE	DESCRIPTION	BLD	CAP	L	W	UNITS	UT	Adj R	ADJ UNIT PRICE	ORIG COND	YEAR ON	YEAR ACTUAL	Q	% COND	OB/XF MKT VALUE	NOTES
1	0803	ASPHALT C	0	0	0	0	70,457.00	SF	2.00	2.00	1	2012	2012	3	1	1,409	
2	0400	CONC CURB	0	0	0	0	2,458.00	LF	15.00	15.00	1	2012	2012	3	1	369	
3	0812	CONCRETE C	0	0	0	0	1,730.00	SF	4.00	4.00	1	2012	2012	3	1	69	
5	0090	AUTO DOOR	0	0	0	0	2.00	UT	2,500.00	2,500.00	1	2012	2012	3	1	50	
6	0812	CONCRETE C	0	0	0	0	4,789.00	SF	4.00	4.00	1	2012	2012	3	1	192	
7	0402	CONC BUMPE	0	0	0	0	6.00	UT	25.00	25.00	1	2012	2012	3	93	140	
8	0972	ST LGHT UN	0	0	0	0	4.00	UT	2,530.00	2,530.00	1	2012	2012	3	1	101	
9	0975	ST LT/ARM	0	0	0	0	7.00	UT	500.00	500.00	1	2012	2012	3	1	35	
10	0400	CONC CURB	0	0	0	0	219.00	LF	15.00	15.00	1	2012	2012	3	93	3,055	
11	0811	CONCRETE B	0	0	216	3	648.00	SF	5.20	5.20	1	2012	2012	3	1	34	

TOTAL OB/XF 5,454

LAND DESCRIPTION

LN	USE CODE	CLS	LAND USE DESCRIPTION	CAP	RD	LOC ZONE	FRONT	DEPTH	TOT LND UTS	UNIT TYPE	DT	DPTH FACT	% COND	TOT ADJ	UNIT PRICE	ADJ UNIT PRICE	LAND VALUE	OTHER ADJUSTMENTS AND NOTES	YEAR	DENSITY	DECL	FRZ	YR	CONSRV
1	001600	C	SH CTR COM	0	0004	PUD	0.00	0.00	191,228.00	SF		1.00	1.00	1.00	8.50	8.50	1,625,438							

REVIEW DATE 04/09/2025 BY KW Total Acres: 4.39 Total Land Value: 0 Market: 0 Agricultural: 0 Common: 0 PRINTED 07/30/2025 BY SYS

PT SW1/4 OF NW1/4 OF
SEC 25-2N-28E PT OR 2209/631
BEING "SHOPPING CENTER OPTION

NNN YULEE FL OWNER LP/
420 S ORANGE AVE STE #400
ORLANDO, FL 32801

2025

25-2N-28-0000-0002-1170

NASSAU COUNTY PROPERTY

BUILDING CHARACTERISTICS

ELEMENT	CD	CONSTRUCTION

DOR CODE	1600	COMMUNITY SHOPPING	
MAP NUM		MKT AREA	04
NEIGHBORHOOD/LOC	4002.00		

AREA TYPE	TOTAL GROSS AREA	PCT OF BASE	YEAR	TOT ADJ AREA	SUBAREA MARKET VALUE
TOTALS					

MARKET ADJUSTMENTS

TYPE	MDL	EFF. AREA	TOT ADJ PTS	EFF. BASE RATE	REPL. COST NEW	AYB	EYB	ECON	FNCT		NORM	% COND

VALUATION SUMMARY

VALUATION BY	DIRECT_CAP
Tax Group: 4	Tax Dist:
BUILDING MARKET VALUE	4,792,682
TOTAL MARKET OB/XF VALUE	0
TOTAL LAND VALUE - MARKET	0
TOTAL MARKET VALUE	4,792,682
SOH/AGL Deduction	227,682
ASSESSED VALUE	4,565,000
TOTAL EXEMPTION VALUE	0
BASE TAXABLE VALUE	4,565,000
TOTAL JUST VALUE	4,792,682
NCON VALUE	0
INCOME VALUE	4,792,682
PREVIOUS YEAR MKT VALUE	4,150,000

PERMIT NUM	DESCRIPTION	AMT	ISSUED
R12819	NEW CONSTR	165,000	01/01/2012
E24088	NEW CONSTR	0	11/01/2011
E24096	NEW CONSTR	0	11/01/2011
E23981	NEW CONSTR	0	11/01/2011
E23905	ELEC OTHER	0	10/01/2011
E23764	NEW CONSTR	0	09/01/2011

SALES DATA

OFF RECORD Number	DATE	TYPE INST	Q U	V I	RSN CD	SALE PRICE
2209/0631	6/07/2018	SW	Q	I	05	26,152,500
GRANTOR: PX AMELIA LP						
GRANTEE: NNN YULEE FL OWNER						
1865/0383	6/27/2013	SW	Q	I	05	20,905,300
GRANTOR: VILLAGES OF AMELIA LL						
GRANTEE: PX AMELIA LP						

BLD DATE		LGL DATE	
XF DATE	04/09/2025 KW	LAND DATE	04/25/2025 DC
INC DATE	05/13/2025 REA	AG DATE	

BUILDING NOTES

EXTRA FEATURES

LN	OB/XF CODE	DESCRIPTION	BLD	CAP	L	W	UNITS	UT	Adj R	ADJ UNIT PRICE	ORIG COND	YEAR ON	YEAR ACTUAL	Q	% COND	OB/XF MKT VALUE	NOTES
12	0803	ASPHALT C	0	0	0	0	26,277.00	SF	2.00	2.00	1	2012	2012	3	1	526	
13	0400	CONC CURB	0	0	0	0	343.00	LF	15.00	15.00	1	2012	2012	3	1	51	
14	0810	CONCRETE A	0	0	0	0	172.00	SF	6.50	6.50	1	2012	2012	3	1	11	
15	4950	BOLLARD	0	0	0	0	19.00	UT	100.00	100.00	1	2012	2012	3	1	19	
17	0972	ST LGHT UN	0	0	0	0	3.00	UT	2,530.00	2,530.00	1	2012	2012	3	1	76	
18	0975	ST LT/ARM	0	0	0	0	12.00	UT	500.00	500.00	1	2012	2012	3	1	60	
19	0966	FIRE SPRNK	0	0	0	0	55,382.00	SF	3.00	3.00	1	2012	2012	3	1	1,661	

BUILDING DIMENSIONS

LAND DESCRIPTION

TOTAL OB/XF 2,404

LN	USE CODE	CLS	LAND USE DESCRIPTION	CAP	RD	LOC ZONE	FRONT	DEPTH	TOT LND UTS	UNIT TYPE	DT	DPTH FACT	% COND	TOT ADJ	UNIT PRICE	ADJ UNIT PRICE	LAND VALUE	OTHER ADJUSTMENTS AND NOTES	YEAR	DENSITY	DECL	FRZ	YR	CONSRV

REVIEW DATE 04/09/2025 BY KW Total Acres: 4.39 Total Land Value: 0 Market: 0 Agricultural: 0 Common: 0 PRINTED 07/30/2025 BY SYS