PT JOHN BACHELOT GRANT
SEC 24-3N-28E IN OR 1531/85 &
OR 2046/643

HOPE TIMOTHY A & JOY A
6314 SIOUX DRIVE
GRANBURY, TX 76049

2025

24-3N-28-0000-0002-0000

NASSAU COUNTY PROPERTY

BUILDING CHARACTERISTICS

ELEMENT	CD	CONSTRUCTION
Exterior Wall	10	ABOVE AVG 100
Roof Structur	08	IRREGULAR 100
Roof Cover	12	MODULAR MT 100
Interior Wall	05	DRYWALL 100
Interior Floo	13	LVT/LAMNT 50
Interior Floo	14	CARPET 50
Air Condition	03	CENTRAL 100
Heating Type	04	AIR DUCTED 100
Bedrooms		2 100
Bathrooms		2 100
Frame	02	WOOD FRAME 100
Stories	1.5	1.5 100
Units		0 100
Occupancy	00	NONE 100
Quality	05	Quality Level 05
DOR CODE	0100	SINGLE FAMILY
MAP NUM		MKT AREA 02
NEIGHBORHOOD/LOC	2001.00	

AREA TYPE	TOTAL GROSS AREA	PCT OF BASE	YEAR	TOT ADJ AREA	SUBAREA MARKET VALUE
BAL	44	15	2010	7	1,360
BAS	714	100	2010	714	138,765
FOP	133	30	2010	40	7,774
FUS	644	100	2010	644	125,161
STR	42	10	2010	4	777
TOTALS	1,577			1,409	273,838

MARKET ADJUSTMENTS

TYPE	MDL	EFF. AREA	TOT ADJ PTS	EFF. BASE RATE	REPL. COST NEW	AYB	EYB	ECON	FNCT		NORM	% COND
0500	01	1,409	131.5600	207.86	292,875	2010	2010	0	0	0	6.50	93.50

1 SFR CUST – 0% - 0 Heated Area: 1358 HX Base Yr

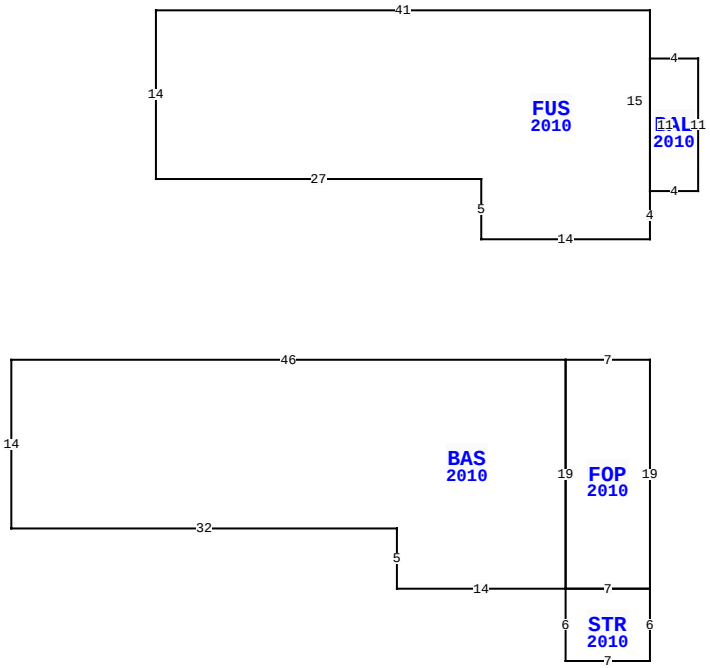

480 PINE TRL, FERNANDINA BEACH

BLD DATE		LGL DATE	
XF DATE		LAND DATE	
INC DATE		AG DATE	

VALUATION SUMMARY

VALUATION BY	STANDARD
Tax Group: 8	Tax Dist:
BUILDING MARKET VALUE	522,992
TOTAL MARKET OB/XF VALUE	7,302
TOTAL LAND VALUE - MARKET	54,900
TOTAL MARKET VALUE	585,194
SOH/AGL Deduction	129,541
ASSESSED VALUE	455,653
TOTAL EXEMPTION VALUE	0
BASE TAXABLE VALUE	455,653
TOTAL JUST VALUE	585,194
NCON VALUE	0
INCOME VALUE	
PREVIOUS YEAR MKT VALUE	559,822

PERMIT NUM	DESCRIPTION	AMT	ISSUED
M2007268	H/AC	4,718	08/01/2020
B1801130	NEW CONSTR	221,452	02/01/2018
B1801131	GARAGE	105,540	02/01/2018
C22916	CO ISSUED	0	06/17/2010
P14154	OTHER	0	02/01/2010
M15039	MECH OTHER	0	01/10/2010

SALES DATA

OFF RECORD Number	DATE	TYPE INST	Q U	V I	RSN CD	SALE PRICE
2046/0643	5/10/2016	WD	U	V	37	50,000
GRANTOR: GRANGER DAVID A & PEG						
GRANTEE: HOPE TIMOTHY A & JO						
1696/0426	8/20/2010	FJ	U	V	18	100
GRANTOR: NASSAU COUNTY CLERK O						
GRANTEE: MCKEE MARGARET A ET						

BUILDING NOTES

BUILDING DIMENSIONS

FOP=[YR=2010] W7 BAS=[YR=2010] W46 S14E32 S5E14 STR=[YR=2010] S6E7N6W7$ N19$ S19E7 N19$ PTR=N10 FUS=[YR=2010] N4 BAL=[YR=2010] E4N11W4S11$ N15 W41 S14E27S5E14$ S10$.

EXTRA FEATURES

LN	OB/XF CODE	DESCRIPTION	BLD	CAP	L	W	UNITS	UT	Adj R	ADJ UNIT PRICE	ORIG COND	YEAR ON	YEAR ACTUAL	Q	% COND	OB/XF MKT VALUE	NOTES
1	0811	CONCRETE B	0	0	0	0	1,059.00	SF	5.20	5.20	100	2018	2018	3	97	5,342	
2	0504	FP-ELECTRI	0	0	0	0	1.00	UT	2,000.00	2,000.00	100	2018	2018	3	98	1,960	

LAND DESCRIPTION

TOTAL OB/XF 7,302

LN	USE CODE	CLS	LAND USE DESCRIPTION	CAP	RD	LOC ZONE	FRONT	DEPTH	TOT LND UTS	UNIT TYPE	DT	DPTH FACT	% COND	TOT ADJ	UNIT PRICE	ADJ UNIT PRICE	LAND VALUE	OTHER ADJUSTMENTS AND NOTES	YEAR	DENSITY	DECL	FRZ	YR	CONSRV
1	000116	C	RES MARSH	0	0007	RSF-2	0.00	0.00	0.61	AC		1.00	1.00	1.00	90,000.00	90,000.00	54,900							

REVIEW DATE 05/14/2024 BY KBA Total Acres: 0.61 Total Land Value: 54,900 Market: 0 Agricultural: 0 Common: 54,900 PRINTED 07/30/2025 BY SYS

PT JOHN BACHELOT GRANT
SEC 24-3N-28E IN OR 1531/85 &
OR 2046/643

HOPE TIMOTHY A & JOY A
6314 SIOUX DRIVE
GRANBURY, TX 76049

2025

24-3N-28-0000-0002-0000

NASSAU COUNTY PROPERTY

BUILDING CHARACTERISTICS

ELEMENT	CD	CONSTRUCTION
Exterior Wall	10	ABOVE AVG 100
Roof Structur	03	GABLE/HIP 100
Roof Cover	12	MODULAR MT 100
Interior Wall	05	DRYWALL 100
Interior Floo	13	LVT/LAMNT 100
Air Condition	03	CENTRAL 100
Heating Type	04	AIR DUCTED 100
Bedrooms		1 100
Bathrooms		1.5 100
Frame	02	WOOD FRAME 100
Stories	2.	2. 100
Units		0 100
Occupancy	00	NONE 100
Quality	06	Quality Level 06

DOR CODE 0100 SINGLE FAMILY
MAP NUM | MKT AREA 02
NEIGHBORHOOD/LOC 2001.00

AREA TYPE	TOTAL GROSS AREA	PCT OF BASE	YEAR	TOT ADJ AREA	SUBAREA MARKET VALUE
BAS	1,225	100	2018	1,225	95,347
DCK	222	10	2018	22	1,712
FOP	200	30	2018	60	4,670
FOP	200	30	2018	60	4,670
FOP	200	30	2018	60	4,670
FUS	582	100	2018	582	45,299
STP	16	10	2018	2	156
STP	21	10	2018	2	156
STP	42	10	2018	4	311
STR	48	10	2018	5	389
TOTALS	2,756			2,022	157,381

MARKET ADJUSTMENTS

TYPE	MDL	EFF. AREA	TOT ADJ PTS	EFF. BASE RATE	REPL. COST NEW	AYB	EYB	ECON	FNCT		NORM	% COND
0150	11	2,022	150.6162	79.83	161,416	2018	2018	0	0	0	2.50	97.50

2 ACCESORY U – 0% - 0 Heated Area: 1807 HX Base Yr

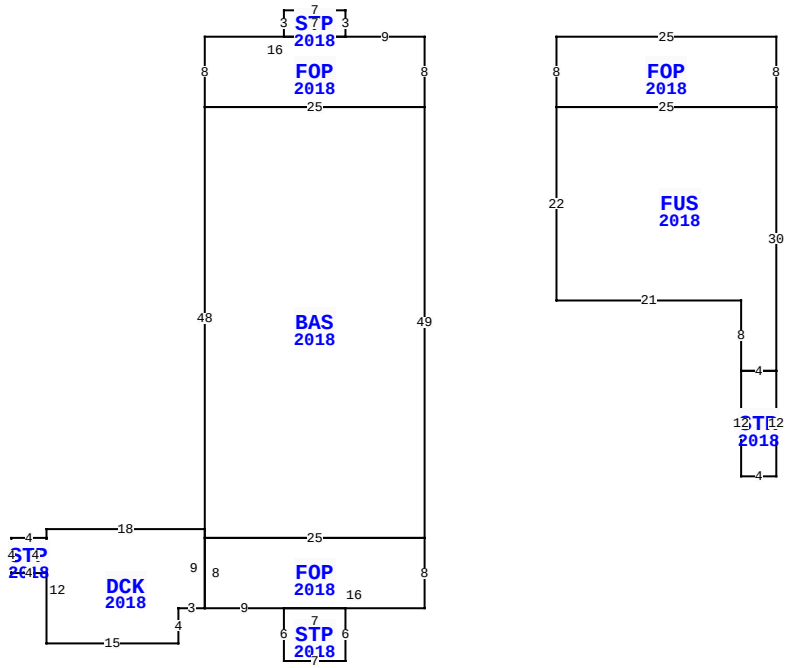

480 PINE TRL, FERNANDINA BEACH

BLD DATE		LGL DATE	
XF DATE		LAND DATE	
INC DATE		AG DATE	

VALUATION SUMMARY

VALUATION BY	STANDARD
Tax Group: 8	Tax Dist:
BUILDING MARKET VALUE	522,992
TOTAL MARKET OB/XF VALUE	7,302
TOTAL LAND VALUE - MARKET	54,900
TOTAL MARKET VALUE	585,194
SOH/AGL Deduction	129,541
ASSESSED VALUE	455,653
TOTAL EXEMPTION VALUE	0
BASE TAXABLE VALUE	455,653
TOTAL JUST VALUE	585,194
NCON VALUE	0
INCOME VALUE	
PREVIOUS YEAR MKT VALUE	559,822

PERMIT NUM	DESCRIPTION	AMT	ISSUED
E0922184	ELEC OTHER	1,950	10/01/2009
R0912121	REPAIR/RRF	3,000	10/01/2009
B0922916	NEW CONSTR	93,852	10/01/2009
WE00548	WELL	0	09/01/2009

SALES DATA

OFF RECORD Number	DATE	TYPE INST	Q U	V I	RSN CD	SALE PRICE
2046/0643	5/10/2016	WD	U	V	37	50,000
GRANTOR: GRANGER DAVID A & PEG						
GRANTEE: HOPE TIMOTHY A & JO						
1696/0426	8/20/2010	FJ	U	V	18	100
GRANTOR: NASSAU COUNTY CLERK O						
GRANTEE: MCKEE MARGARET A ET						

BUILDING NOTES

BUILDING DIMENSIONS

FOP=[YR=2018] W9 STP=[YR=2018] N3 W7 S3 E7 $ W16 S8
BAS=[YR=2018] S48 DCK=[YR=2018] W18 S1 STP=[YR=2018] W4 S4
E4 N4$ S12 E15 N4 E3 FOP=[YR=2018] E9 STP=[YR=2018] S6 E7 N6
W7$ E16 N8 W25 S8$ N9$ S1 E25 N49 W25$ E25 N8$ PTR=E15
FOP=[YR=2018] E25 S8 FUS=[YR=2018] S30 STR=[YR=2018] S12 W4
N12 E4$ W4 N8 W21 N22 E25$ W25 N8$ W15$.

EXTRA FEATURES

LN	OB/XF CODE	DESCRIPTION	BLD	CAP	L	W	UNITS	UT	Adj R	ADJ UNIT PRICE	ORIG COND	YEAR ON	YEAR ACTUAL	Q	% COND	OB/XF MKT VALUE	NOTES

LAND DESCRIPTION

TOTAL OB/XF 0

LN	USE CODE	CLS	LAND USE DESCRIPTION	CAP	RD	LOC ZONE	FRONT	DEPTH	TOT LND UTS	UNIT TYPE	DT	DPTH FACT	% COND	TOT ADJ	UNIT PRICE	ADJ UNIT PRICE	LAND VALUE	OTHER ADJUSTMENTS AND NOTES	YEAR	DENSITY	DECL	FRZ	YR	CONSRV

REVIEW DATE 05/14/2024 BY KBA Total Acres: 0.61 Total Land Value: 54,900 Market: 0 Agricultural: 0 Common: 54,900 PRINTED 07/30/2025 BY SYS

PT JOHN BACHELOT GRANT
SEC 24-3N-28E IN OR 1531/85 &
OR 2046/643

HOPE TIMOTHY A & JOY A
6314 SIOUX DRIVE
GRANBURY, TX 76049

2025

24-3N-28-0000-0002-0000

NASSAU COUNTY PROPERTY

BUILDING CHARACTERISTICS

ELEMENT	CD	CONSTRUCTION
Exterior Wall	10	ABOVE AVG 100
Roof Structur	03	GABLE/HIP 100
Roof Cover	12	MODULAR MT 100
Interior Wall	05	DRYWALL 100
Interior Floo	13	LVT/LAMNT 100
Air Condition	03	CENTRAL 100
Heating Type	04	AIR DUCTED 100
Bedrooms		1 100
Bathrooms		1 100
Frame	02	WOOD FRAME 100
Stories	2.	2. 100
Units		0 100
Occupancy	00	NONE 100
Quality	06	Quality Level 06

DOR CODE	0100	SINGLE FAMILY	
MAP NUM		MKT AREA	02
NEIGHBORHOOD/LOC	2001.00		

AREA TYPE	TOTAL GROSS AREA	PCT OF BASE	YEAR	TOT ADJ AREA	SUBAREA MARKET VALUE
BAS	650	100	2018	650	58,312
FGR	650	55	2018	358	32,117
STR	152	10	2018	15	1,346
TOTALS	1,452			1,023	91,773

MARKET ADJUSTMENTS

TYPE	MDL	EFF. AREA	TOT ADJ PTS	EFF. BASE RATE	REPL. COST NEW	AYB	EYB	ECON	FNCT		NORM	% COND
0150	11	1,023	173.5992	92.01	94,126	2018	2018	0	0	0	2.50	97.50

3 ACCESORY U – 0% - 0 Heated Area: 650 HX Base Yr

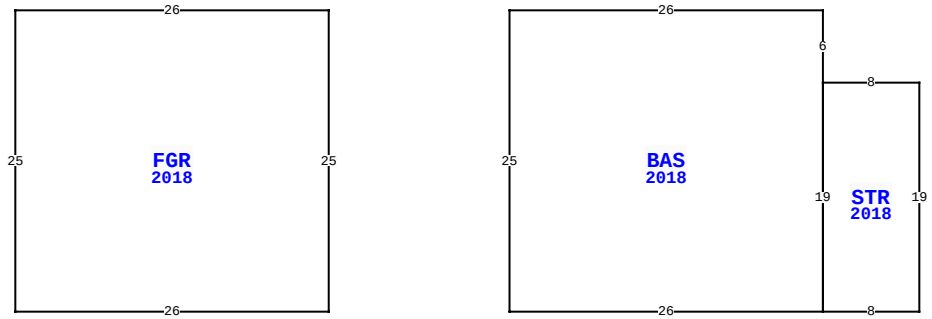

VALUATION SUMMARY

VALUATION BY	STANDARD
Tax Group: 8	Tax Dist:
BUILDING MARKET VALUE	522,992
TOTAL MARKET OB/XF VALUE	7,302
TOTAL LAND VALUE - MARKET	54,900
TOTAL MARKET VALUE	585,194
SOH/AGL Deduction	129,541
ASSESSED VALUE	455,653
TOTAL EXEMPTION VALUE	0
BASE TAXABLE VALUE	455,653
TOTAL JUST VALUE	585,194
NCON VALUE	0
INCOME VALUE	
PREVIOUS YEAR MKT VALUE	559,822

PERMIT NUM	DESCRIPTION	AMT	ISSUED

SALES DATA

OFF RECORD Number	DATE	TYPE INST	Q / U	V / I	RSN CD	SALE PRICE
2046/0643	5/10/2016	WD	U	V	37	50,000
GRANTOR: GRANGER DAVID A & PEG						
GRANTEE: HOPE TIMOTHY A & JO						
1696/0426	8/20/2010	FJ	U	V	18	100
GRANTOR: NASSAU COUNTY CLERK O						
GRANTEE: MCKEE MARGARET A ET						

480 PINE TRL, FERNANDINA BEACH

BLD DATE		LGL DATE	
XF DATE		LAND DATE	
INC DATE		AG DATE	

BUILDING NOTES

BUILDING DIMENSIONS

FGR=[YR=2018] W26 S25 E26 N25$ PTR= E15 BAS=[YR=2018] E26 S6 STR=[YR=2018] E8 S19 W8 N19$ S19 W26 N25$ W15$.

EXTRA FEATURES

L N	OB/XF CODE	DESCRIPTION	BLD	CAP	L	W	UNITS	UT	Adj R	ADJ UNIT PRICE	ORIG COND	YEAR ON	YEAR ACTUAL	Q	% COND	OB/XF MKT VALUE	NOTES

LAND DESCRIPTION

TOTAL OB/XF 0

L N	USE CODE	CLS	LAND USE DESCRIPTION	CAP	R D	LOC ZONE	FRONT	DEPTH	TOT LND UTS	UNIT TYPE	D T	DPTH FACT	% COND	TOT ADJ	UNIT PRICE	ADJ UNIT PRICE	LAND VALUE	OTHER ADJUSTMENTS AND NOTES	YEAR	DENSITY	DECL	FRZ	YR	CONSRV

REVIEW DATE 05/14/2024 BY KBA Total Acres: 0.61 Total Land Value: 54,900 Market: 0 Agricultural: 0 Common: 54,900 PRINTED 07/30/2025 BY SYS