PT OF LOT 11
IN OR 458 PG 67
STE-MAG UNIT 2 PB 5/47

MITCHELL GERALD L & SYLVIA T
PO BOX 1702
YULEE, FL 32041-1702

2025

24-2N-28-4962-0011-0010

NASSAU COUNTY PROPERTY

BUILDING CHARACTERISTICS

ELEMENT	CD	CONSTRUCTION
Exterior Wall	19	COMMON BRK 60
Exterior Wall	31	HARDIE BRD 40
Roof Structur	03	GABLE/HIP 100
Roof Cover	03	COMP SHNGL 100
Interior Wall	05	DRYWALL 100
Interior Floo	13	LVT/LAMNT 90
Interior Floo	08	SHT VINYL 10
Air Condition	03	CENTRAL 100
Heating Type	04	AIR DUCTED 100
Bedrooms		5 100
Bathrooms		2.5 100
Frame	02	WOOD FRAME 100
Stories	2.	2. 100
Units		0 100
BUD8 Adjustme	04	DIST 01 100
Occupancy	00	NONE 100
Quality	01	Quality Level 01
DOR CODE	0100	SINGLE FAMILY
MAP NUM		MKT AREA 04
NEIGHBORHOOD/LOC	4031.00	

AREA TYPE	TOTAL GROSS AREA	PCT OF BASE	YEAR	TOT ADJ AREA	SUBAREA MARKET VALUE
BAL	50	15	1993	8	817
BAS	1,792	100	1993	1,792	182,978
DCK	320	10	2021	32	3,267
FGR	561	55	1993	309	31,551
FOP	70	30	1993	21	2,144
FUS	988	100	1993	988	100,883
SFB	360	80	2007	288	29,407
STR	40	10	2021	4	408
TOTALS	4,181			3,442	351,456

MARKET ADJUSTMENTS

TYPE	MDL	EFF. AREA	TOT ADJ PTS	EFF. BASE RATE	REPL. COST NEW	AYB	EYB	ECON	FNCT		NORM	% COND
0900	01	3,442	96.2136	127.00	437,134	1986	1996	0	0	0	19.60	80.40

1 SNGL FAM – 100% - 0 Heated Area: 3068 HX Base Yr 1987

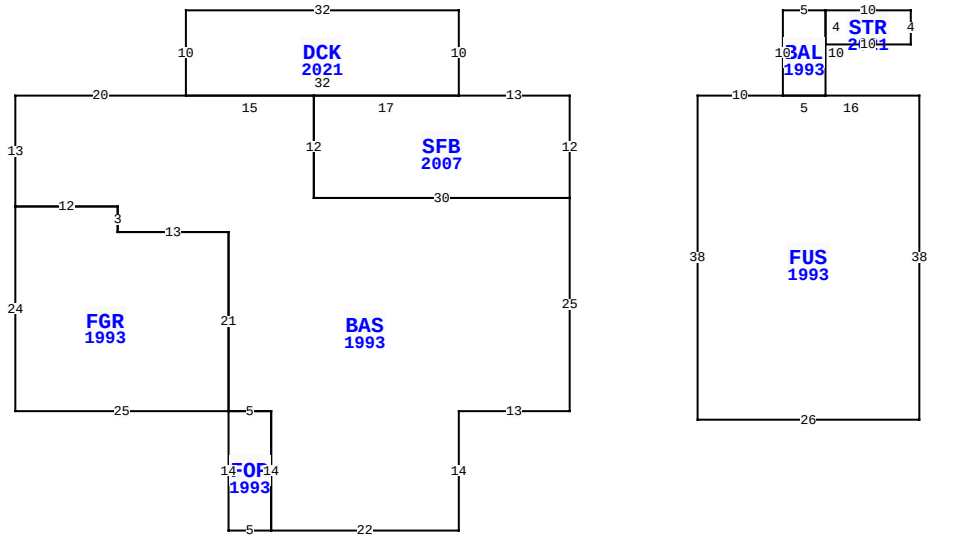

96219 BAKER DR, YULEE

BLD DATE		LGL DATE	
XF DATE		LAND DATE	04/22/2024 MLU
INC DATE		AG DATE	

VALUATION SUMMARY

VALUATION BY		STANDARD
Tax Group: 4	Tax Dist:	
BUILDING MARKET VALUE		351,456
TOTAL MARKET OB/XF VALUE		1,544
TOTAL LAND VALUE - MARKET		130,000
TOTAL MARKET VALUE		483,000
SOH/AGL Deduction		305,796
ASSESSED VALUE		177,204
TOTAL EXEMPTION VALUE	HX HB	50,722
BASE TAXABLE VALUE		126,482
TOTAL JUST VALUE		483,000
NCON VALUE		0
INCOME VALUE		
PREVIOUS YEAR MKT VALUE		451,453

PERMIT NUM	DESCRIPTION	AMT	ISSUED
B2106490	DECK	8,204	05/20/2021
B2100925	(31) WINDOWS	14,600	02/01/2021

SALES DATA

OFF RECORD Number	DATE	TYPE INST	Q U /	V I /	RSN CD	SALE PRICE
0458/0067	6/01/1985	WD	Q	V		3,000

GRANTOR:

GRANTEE:

BUILDING NOTES

BUILDING DIMENSIONS

SFB=[YR=2007] W13 DCK=[YR=2021] N10 W32 S10 BAS=[YR=1993] W20 S13 FGR=[YR=1993] S24 E25 N21 W13 N3 W12$ E12 S3 E13 S21 FOP=[YR=1993] S14 E5 N14 W5$ E5 S14 E22 N14 E13 N25 W30 N12 W15$ E32$ W17 S12 E30 N12$ PTR=E15 FUS=[YR=1993] E10 BAL=[YR=1993] N10 E5 STR=[YR=2021] E10 S4 W10 N4$ S10 W5$ E16 S38 W26 N38$ W15$.

EXTRA FEATURES

LN	OB/XF CODE	DESCRIPTION	BLD	CAP	L	W	UNITS	UT	Adj R	ADJ UNIT PRICE	ORIG COND	YEAR ON	YEAR ACTUAL	Q	% COND	OB/XF MKT VALUE	NOTES
1	0810	CONCRETE A	0	100	20	24	480.00	SF	6.50	6.50	100	1987	1987	3	49.5	1,544	

LAND DESCRIPTION

TOTAL OB/XF 1,544

LN	USE CODE	CLS	LAND USE DESCRIPTION	CAP	RD	LOC ZONE	FRONT	DEPTH	TOT LND UTS	UNIT TYPE	DT	DPTH FACT	% COND	TOT ADJ	UNIT PRICE	ADJ UNIT PRICE	LAND VALUE	OTHER ADJUSTMENTS AND NOTES	YEAR	DENSITY	DECL	FRZ	YR	CONSRV
1	000116	C	RES MARSH	100		RSF-1	0.00	0.00	1.04	AC		1.00	1.00	1.00	125,000.00	125,000.00	130,000							

REVIEW DATE 08/17/2021 BY KW Total Acres: 1.04 Total Land Value: 130,000 Market: 0 Agricultural: 0 Common: 130,000 PRINTED 07/30/2025 BY SYS