LOT 66
HAMPTON LAKES #2 PBK 8/165

COLLINS JOSEPH T & CAROLYN S
85054 MAJESTIC WALK BLVD
FERNANDINA BEACH, FL 32034

2025

24-2N-27-0721-0066-0000

BUILDING CHARACTERISTICS

ELEMENT	CD	CONSTRUCTION
Exterior Wall	31	HARDIE BRD 100
Roof Structur	03	GABLE/HIP 100
Roof Cover	03	COMP SHNGL 100
Interior Wall	05	DRYWALL 100
Interior Floo	08	SHT VINYL 70
Interior Floo	14	CARPET 30
Air Condition	03	CENTRAL 100
Heating Type	04	AIR DUCTED 100
Bedrooms		5 100
Bathrooms		4 100
Frame	02	WOOD FRAME 100
Stories	0	0 100
Units		0 100
Occupancy	00	NONE 100
Quality	03	Quality Level 03

DOR CODE 0100 SINGLE FAMILY
MAP NUM | MKT AREA 04
NEIGHBORHOOD/LOC 4085.00

AREA TYPE	TOTAL GROSS AREA	PCT OF BASE	YEAR	TOT ADJ AREA	SUBAREA MARKET VALUE
BAS	3,276	100	2019	3,276	389,977
FGR	712	55	2019	392	46,664
FOP	228	30	2019	68	8,095
FOP	320	30	2019	96	11,428
FUS	893	100	2019	893	106,304
STR	56	10	2019	6	714
TOTALS	5,485			4,731	563,182

MARKET ADJUSTMENTS

TYPE	MDL	EFF. AREA	TOT ADJ PTS	EFF. BASE RATE	REPL. COST NEW	AYB	EYB	ECON	FNCT		NORM	% COND
0900	01	4,731	92.0200	121.47	574,675	2019	2019	0	0	0	2.00	98.00

1 SNGL FAM – 0% - 0 Heated Area: 4169 HX Base Yr

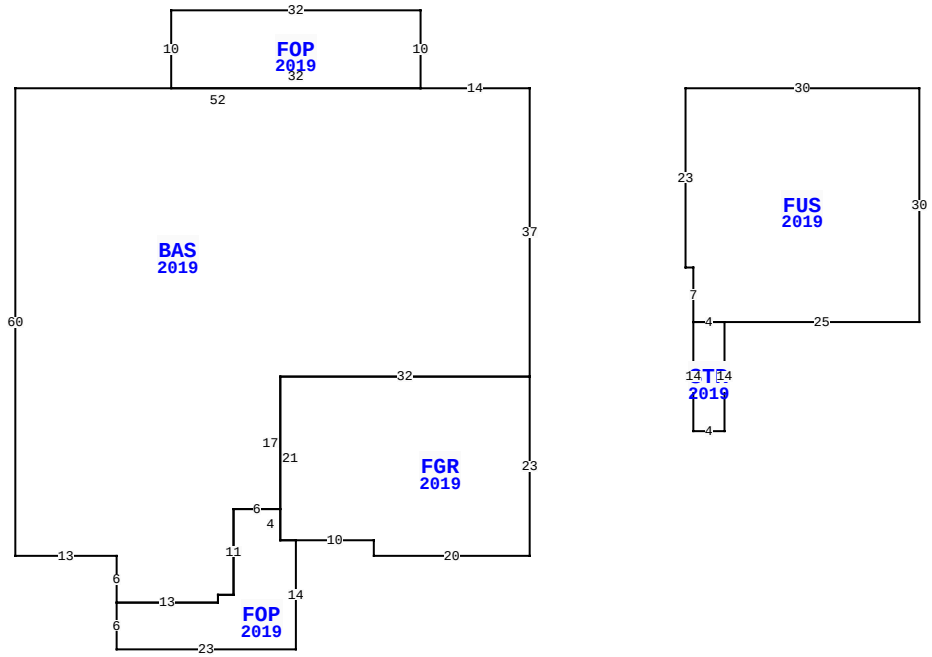

85054 MAJESTIC WALK BLVD, FERNANDINA BEACH

BLD DATE		LGL DATE	
XF DATE		LAND DATE	06/13/2023 MLU
INC DATE		AG DATE	

NASSAU COUNTY PROPERTY

PAGE 1 of 1 4

VALUATION SUMMARY

VALUATION BY	STANDARD
Tax Group: 4	Tax Dist:
BUILDING MARKET VALUE	563,182
TOTAL MARKET OB/XF VALUE	16,054
TOTAL LAND VALUE - MARKET	75,000
TOTAL MARKET VALUE	654,236
SOH/AGL Deduction	28,869
ASSESSED VALUE	625,367
TOTAL EXEMPTION VALUE	0
BASE TAXABLE VALUE	625,367
TOTAL JUST VALUE	654,236
NCON VALUE	0
INCOME VALUE	
PREVIOUS YEAR MKT VALUE	627,217

PERMIT NUM	DESCRIPTION	AMT	ISSUED
19004284	CO ISSUED	0	04/26/2019
18000228	NEW CONSTR	524,030	01/09/2018

SALES DATA

OFF RECORD Number	DATE	TYPE INST	Q U	V I	RSN CD	SALE PRICE
2272/0225	4/26/2019	SW	Q	I	01	474,000
GRANTOR: AVH NORTH FLORIDA LLC						
GRANTEE: COLLINS JOSEPH T &						
2089/0966	12/16/2016	SW	U	V	37	6,730,600
GRANTOR: AW VENTURE II LLC						
GRANTEE: AVH NORTH FLORIDA L						

BUILDING NOTES

BUILDING DIMENSIONS

BAS=[YR=2019] W14 FOP=[YR=2019] N10 W32 S10 E32$ W52 S60 E13 S6 FOP=[YR=2019] S6 E23 N14 FGR=[YR=2019] E10 S2 E20 N23 W32 S21 E2$ W2 N4 W6 S11 W2 S1 W13$ E13 N1E2 N11 E6 N17 E32 N37$ PTR=E20 FUS=[YR=2019] E30 S30 W25 STR=[YR=2019] S14 W4 N14 E4$ W4 N7 W1 N23$ W20$.

EXTRA FEATURES

LN	OB/XF CODE	DESCRIPTION	BLD	CAP	L	W	UNITS	UT	Adj R	ADJ UNIT PRICE	ORIG COND	YEAR ON	YEAR ACTUAL	Q	% COND	OB/XF MKT VALUE	NOTES
1	0855	CONC PAVER	0	0	0	0	1,655.00	SF	10.00	10.00	100	2019	2019	3	97	16,054	

LAND DESCRIPTION

TOTAL OB/XF 16,054

LN	USE CODE	CLS	LAND USE DESCRIPTION	CAP	RD	LOC ZONE	FRONT	DEPTH	TOT LND UTS	UNIT TYPE	DT	DPTH FACT	% COND	TOT ADJ	UNIT PRICE	ADJ UNIT PRICE	LAND VALUE	OTHER ADJUSTMENTS AND NOTES	YEAR	DENSITY	DECL	FRZ	YR	CONSRV
1	000100	C	RES	0		PUD	0.00	0.00	1.00	LT		1.00	1.00	1.00	75,000.00	75,000.00	75,000							

REVIEW DATE 04/11/2019 BY TW Total Acres: 0.00 Total Land Value: 75,000 Market: 0 Agricultural: 0 Common: 75,000 PRINTED 07/30/2025 BY SYS