LOT 60
IN OR 2168/1092
HAMPTON LAKES #2 PBK 8/165

ATKINSON LARRY D & ROHANDA F
85090 MAJESTIC WALK BLVD
FERNANDINA BEACH, FL 32034

2025

24-2N-27-0721-0060-0000

NASSAU COUNTY PROPERTY

BUILDING CHARACTERISTICS

ELEMENT	CD	CONSTRUCTION
Exterior Wall	31	HARDIE BRD 100
Roof Structur	03	GABLE/HIP 100
Roof Cover	03	COMP SHNGL 100
Interior Wall	05	DRYWALL 100
Interior Floo	11	CLAY TILE 50
Interior Floo	14	CARPET 50
Air Condition	03	CENTRAL 100
Heating Type	04	AIR DUCTED 100
Bedrooms		5 100
Bathrooms		3 100
Frame	02	WOOD FRAME 100
Stories	2.	2. 100
Units		0 100
Occupancy	00	NONE 100
Quality	03	Quality Level 03

DOR CODE 0100 SINGLE FAMILY
MAP NUM | MKT AREA 04
NEIGHBORHOOD/LOC 4085.00

AREA TYPE	TOTAL GROSS AREA	PCT OF BASE	YEAR	TOT ADJ AREA	SUBAREA MARKET VALUE
BAS	3,209	100	2017	3,209	393,978
FGR	712	55	2017	392	48,127
FOP	249	30	2017	75	9,208
FSP	320	40	2017	128	15,715
FUS	893	100	2017	893	109,636
STR	56	10	2017	6	736
TOTALS	5,439			4,703	577,401

MARKET ADJUSTMENTS

TYPE	MDL	EFF. AREA	TOT ADJ PTS	EFF. BASE RATE	REPL. COST NEW	AYB	EYB	ECON	FNCT		NORM	% COND
0900	01	4,703	95.8900	126.57	595,259	2017	2017	0	0	0	3.00	97.00

1 SNGL FAM – 100% - 2023 Heated Area: 4102 HX Base Yr

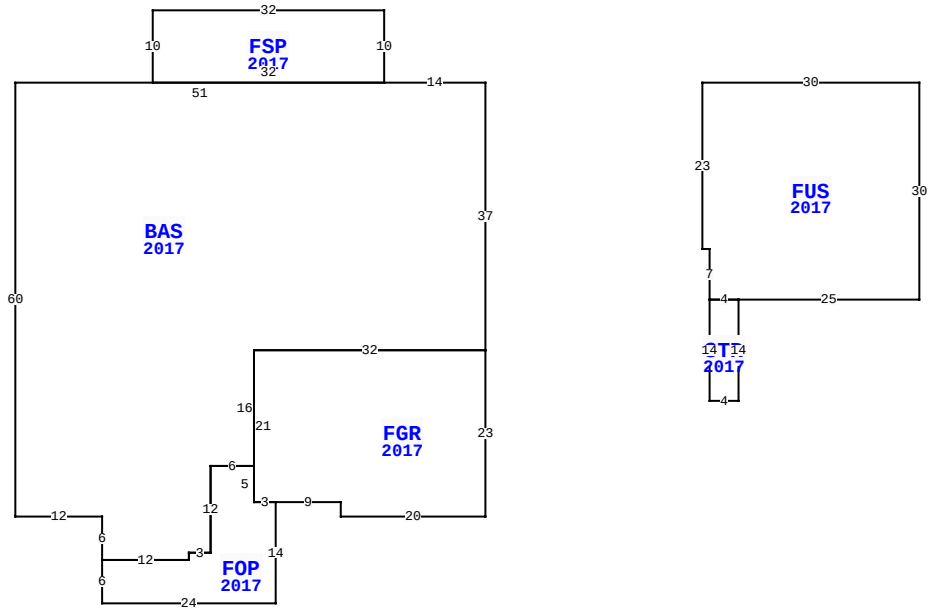

85090 MAJESTIC WALK BLVD, FERNANDINA BEACH

BLD DATE		LGL DATE	
XF DATE		LAND DATE	06/13/2023 MLU
INC DATE		AG DATE	

VALUATION SUMMARY

VALUATION BY		STANDARD
Tax Group: 4	Tax Dist:	
BUILDING MARKET VALUE		577,401
TOTAL MARKET OB/XF VALUE		17,194
TOTAL LAND VALUE - MARKET		75,000
TOTAL MARKET VALUE		669,595
SOH/AGL Deduction		19,235
ASSESSED VALUE		650,360
TOTAL EXEMPTION VALUE	13	650,360
BASE TAXABLE VALUE		0
TOTAL JUST VALUE		669,595
NCON VALUE		0
INCOME VALUE		
PREVIOUS YEAR MKT VALUE		641,982

PERMIT NUM	DESCRIPTION	AMT	ISSUED
17011399	CO ISSUED	0	12/21/2017
17004811	NEW CONSTR	513,732	05/31/2017

SALES DATA

OFF RECORD Number	DATE	TYPE INST	Q / U	V / I	RSN CD	SALE PRICE
2168/1092	12/29/2017	SW	Q	I	01	468,000
GRANTOR: AVH NORTH FLORIDA LLC						
GRANTEE: ATKINSON LARRY D &						
2089/0966	12/16/2016	SW	U	V	37	6,730,600
GRANTOR: AW VENTURE II LLC						
GRANTEE: AVH NORTH FLORIDA L						

BUILDING NOTES

BUILDING DIMENSIONS

BAS=[YR=2017;ORIG=0,0] W14 W51 S60 E12 S6 E12 N1 E3 N12 E6 N16 E32 N37 $
FUS=[YR=2017;ORIG=30,0] E30 S30 W25 W4 N7 W1 N23 $
FGR=[YR=2017;ORIG=-29,58] E9 S2 E20 N23 W32 S21 E3 $
FSP=[YR=2017;ORIG=-14,0] N10 W32 S10 E32 $
FOP=[YR=2017;ORIG=-53,66] S6 E24 N14 W3 N5 W6 S12 W3 S1 W12 $
STR=[YR=2017;ORIG=35,30] S14 W4 N14 E4 $
PTR=[YR=2017;ORIG=0,0] E30 W30 $
.

EXTRA FEATURES

LN	OB/XF CODE	DESCRIPTION	BLD	CAP	L	W	UNITS	UT	Adj R	ADJ UNIT PRICE	ORIG COND	YEAR ON	YEAR ACTUAL	Q	% COND	OB/XF MKT VALUE	NOTES
1	0855	CONC PAVER	0	100	0	0	1,791.00	SF	10.00	10.00	100	2017	2017	3	96	17,194	

LAND DESCRIPTION

TOTAL OB/XF 17,194

LN	USE CODE	CLS	LAND USE DESCRIPTION	CAP	RD	LOC ZONE	FRONT	DEPTH	TOT LND UTS	UNIT TYPE	DT	DPTH FACT	% COND	TOT ADJ	UNIT PRICE	ADJ UNIT PRICE	LAND VALUE	OTHER ADJUSTMENTS AND NOTES	YEAR	DENSITY	DECL	FRZ	YR	CONSRV
1	000134	C	RES POND	100		PUD	0.00	0.00	1.00	LT		1.00	1.00	1.00	75,000.00	75,000.00	75,000							

REVIEW DATE 04/26/2024 BY KBA Total Acres: 0.00 Total Land Value: 75,000 Market: 0 Agricultural: 0 Common: 75,000 PRINTED 07/30/2025 BY SYS