BLOCK 3 PT OF LOT 25
OR 724/1244 SEC 30-1N-25
2001 FLEE DW/MH

ROZBORA GEORGE S & NANCY V
43156 BLACK JACK RIDGE
CALLAHAN, FL 32011

2025

24-1N-24-0750-0003-0252

BUILDING CHARACTERISTICS

ELEMENT	CD	CONSTRUCTION
Exterior Wall	12	CEDAR 100
Roof Structur	08	IRREGULAR 100
Roof Cover	03	COMP SHNGL 100
Interior Wall	05	DRYWALL 100
Interior Floo	14	CARPET 60
Interior Floo	11	CLAY TILE 40
Air Condition	03	CENTRAL 100
Heating Type	04	AIR DUCTED 100
Bedrooms		4 100
Bathrooms		3 100
Frame	02	WOOD FRAME 100
Stories	2.	2. 100
Units		0 100
BUD8 Adjustme	06	DIST 1D 100
Occupancy	00	NONE 100
Quality	02	Quality Level 02

DOR CODE 0100 SINGLE FAMILY
MAP NUM | MKT AREA 08
NEIGHBORHOOD/LOC 8005.00

AREA TYPE	TOTAL GROSS AREA	PCT OF BASE	YEAR	TOT ADJ AREA	SUBAREA MARKET VALUE
BAS	1,290	100	1993	1,290	152,130
DCK	456	10	1993	46	5,425
FGR	484	55	1993	266	31,369
FOP	372	30	1993	112	13,208
FSP	168	40	1993	67	7,901
FST	70	55	1993	38	4,482
FUS	968	100	1993	968	114,157
TOTALS	3,808			2,787	328,672

MARKET ADJUSTMENTS

TYPE	MDL	EFF. AREA	TOT ADJ PTS	EFF. BASE RATE	REPL. COST NEW	AYB	EYB	ECON	FNCT		NORM	% COND
0900	01	2,787	109.6224	144.70	403,279	1987	1987	0	0	0	18.50	81.50

1 SNGL FAM – 100% - 1996 Heated Area: 2258 HX Base Yr 1996

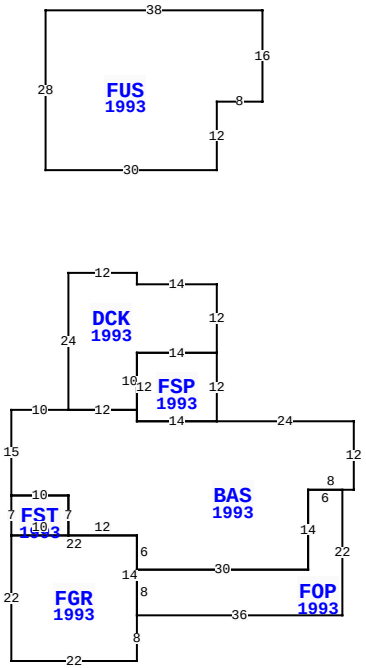

43156 BLACK JACK RDG, CALLAHAN

BLD DATE	03/03/2023 NW	LGL DATE	
XF DATE		LAND DATE	05/09/2025 MLU
INC DATE		AG DATE	

NASSAU COUNTY PROPERTY

PAGE 1 of 2 6

VALUATION SUMMARY

VALUATION BY		STANDARD
Tax Group: 6	Tax Dist:	
BUILDING MARKET VALUE		405,122
TOTAL MARKET OB/XF VALUE		12,666
TOTAL LAND VALUE - MARKET		131,235
TOTAL MARKET VALUE		549,023
SOH/AGL Deduction		266,288
ASSESSED VALUE		282,735
TOTAL EXEMPTION VALUE	HX HB	50,722
BASE TAXABLE VALUE		232,013
TOTAL JUST VALUE		549,023
NCON VALUE		0
INCOME VALUE		
PREVIOUS YEAR MKT VALUE		504,437

PERMIT NUM	DESCRIPTION	AMT	ISSUED
MH013462	MH MOVE-ON	0	04/01/2001
B99	GARAGE	12,240	10/01/1999

SALES DATA

OFF RECORD Number	DATE	TYPE INST	Q U	V I	RSN CD	SALE PRICE
0724/1244	2/28/1995	WD	Q	I		156,000
GRANTOR: BURNSED MIKE & TAMMIE						
GRANTEE: ROZBORA GEORGE & NA						
0458/0492	6/01/1985	QC	U	V		100
GRANTOR:						
GRANTEE:						

BUILDING NOTES

BUILDING DIMENSIONS

DCK=[YR=1993] W14 N2 W12 S24 BAS=[YR=1993] W10 S15 FST=[YR=1993] S7 FGR=[YR=1993] S22 E22 N8 FOP=[YR=1993] E36 N22 W6 S14 W30 S8 $ N14 W22 $ E10 N7 W10 $ E10 S7 E12 S6 E30 N14 E8 N12 W24 FSP=[YR=1993] N12 W14 S12 E14 $ W14 N2 W12 $ E12 N10 E14 N12 $ PTR= N20 FUS=[YR=1993] N12 E8 N16 W38 S28 E30 $ S20 $.

EXTRA FEATURES

LN	OB/XF CODE	DESCRIPTION	BLD	CAP	L	W	UNITS	UT	Adj R	ADJ UNIT PRICE	ORIG COND	YEAR ON	YEAR ACTUAL	Q	% COND	OB/XF MKT VALUE	NOTES
1	0812	CONCRETE C	0	100	0	0	1,515.00	SF	4.00	4.00	100	1987	1987	3	49.5	3,000	
2	0500	FP-PRE FAB	0	100	0	0	1.00	UT	3,500.00	3,500.00	100	1987	1987	3	60	2,100	
3	0510	GARAGE WD-	0	100	24	30	720.00	SF	35.00	35.00	100	1996	1996	3	23	5,796	
4	0681	POLE SHED	0	100	0	0	715.00	SF	9.90	9.90	100	1998	1998	3	25	1,770	

LAND DESCRIPTION

TOTAL OB/XF 12,666

LN	USE CODE	CLS	LAND USE DESCRIPTION	CAP	RD	LOC ZONE	FRONT	DEPTH	TOT LND UTS	UNIT TYPE	DT	DPTH FACT	% COND	TOT ADJ	UNIT PRICE	ADJ UNIT PRICE	LAND VALUE	OTHER ADJUSTMENTS AND NOTES	YEAR	DENSITY	DECL	FRZ	YR	CONSRV
1	000100	C	RES	100	0007	OR	0.00	0.00	6.73	AC		1.00	1.00	1.00	19,500.00	19,500.00	131,235							

REVIEW DATE 05/12/2019 BY KBA Total Acres: 6.73 Total Land Value: 131,235 Market: 0 Agricultural: 0 Common: 131,235 PRINTED 07/30/2025 BY SYS

BLOCK 3 PT OF LOT 25
OR 724/1244 SEC 30-1N-25
2001 FLEE DW/MH

ROZBORA GEORGE S & NANCY V
43156 BLACK JACK RIDGE
CALLAHAN, FL 32011

2025

24-1N-24-0750-0003-0252

NASSAU COUNTY PROPERTY

BUILDING CHARACTERISTICS

ELEMENT	CD	CONSTRUCTION
Exterior Wall	30	VINYL 100
Roof Structur	03	GABLE/HIP 100
Roof Cover	03	COMP SHNGL 100
Interior Wall	05	DRYWALL 100
Interior Floo	14	CARPET 70
Interior Floo	08	SHT VINYL 30
Air Condition	03	CENTRAL 100
Heating Type	04	AIR DUCTED 100
Bedrooms		3 100
Bathrooms		2 100
Frame	02	WOOD FRAME 100
Stories	1.	1. 100
Units		0 100
Quality	03	Quality Level 03

DOR CODE 0100 SINGLE FAMILY
MAP NUM | MKT AREA 08
NEIGHBORHOOD/LOC 8005.00

AREA TYPE	TOTAL GROSS AREA	PCT OF BASE	YEAR	TOT ADJ AREA	SUBAREA MARKET VALUE
BAS	1,512	100	2007	1,512	69,051
FSP	270	60	2007	162	7,398
TOTALS	1,782			1,674	76,450

MARKET ADJUSTMENTS

TYPE	MDL	EFF. AREA	TOT ADJ PTS	EFF. BASE RATE	REPL. COST NEW	AYB	EYB	ECON	FNCT		NORM	% COND
0800	02	1,674	116.8000	99.28	166,195	2001	2001	0	0	0	54.00	46.00

2 M/H 94+ – 0% - 1996 Heated Area: 1512 HX Base Yr 1996

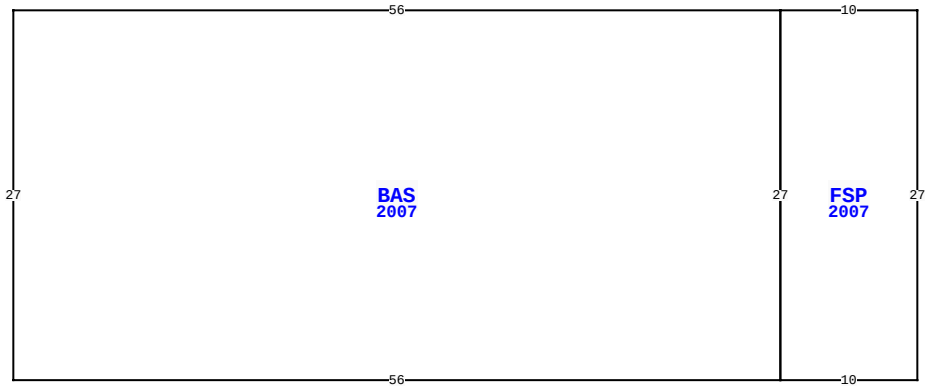

43156 BLACK JACK RDG, CALLAHAN

BLD DATE	03/03/2023 NW	LGL DATE	
XF DATE		LAND DATE	05/09/2025 MLU
INC DATE		AG DATE	

VALUATION SUMMARY

VALUATION BY		STANDARD
Tax Group: 6	Tax Dist:	
BUILDING MARKET VALUE		405,122
TOTAL MARKET OB/XF VALUE		12,666
TOTAL LAND VALUE - MARKET		131,235
TOTAL MARKET VALUE		549,023
SOH/AGL Deduction		266,288
ASSESSED VALUE		282,735
TOTAL EXEMPTION VALUE	HX HB	50,722
BASE TAXABLE VALUE		232,013
TOTAL JUST VALUE		549,023
NCON VALUE		0
INCOME VALUE		
PREVIOUS YEAR MKT VALUE		504,437

PERMIT NUM	DESCRIPTION	AMT	ISSUED

SALES DATA

OFF RECORD Number	DATE	TYPE INST	Q / U	V / I	RSN CD	SALE PRICE
0724/1244	2/28/1995	WD	Q	I		156,000
GRANTOR: BURNSED MIKE & TAMMIE						
GRANTEE: ROZBORA GEORGE & NA						
0458/0492	6/01/1985	QC	U	V		100
GRANTOR:						
GRANTEE:						

BUILDING NOTES

BUILDING DIMENSIONS

FSP=[YR=2007] W10 BAS=[YR=2007] W56 S27 E56 N27$ S27 E10 N27$.

EXTRA FEATURES

L N	OB/XF CODE	DESCRIPTION	BLD	CAP	L	W	UNITS	UT	Adj R	ADJ UNIT PRICE	ORIG COND	YEAR ON	YEAR ACTUAL	Q	% COND	OB/XF MKT VALUE	NOTES

LAND DESCRIPTION

TOTAL OB/XF 0

L N	USE CODE	CLS	LAND USE DESCRIPTION	CAP	R D	LOC ZONE	FRONT	DEPTH	TOT LND UTS	UNIT TYPE	D T	DPTH FACT	% COND	TOT ADJ	UNIT PRICE	ADJ UNIT PRICE	LAND VALUE	OTHER ADJUSTMENTS AND NOTES	YEAR	DENSITY	DECL	FRZ	YR	CONSRV

REVIEW DATE 05/12/2019 BY KBA Total Acres: 6.73 Total Land Value: 131,235 Market: 0 Agricultural: 0 Common: 131,235 PRINTED 07/30/2025 BY SYS