LOT 99
SOUTHERN PINES OR 2476/315

BRANCH MYRA KELLAM & GEORGE EDWARD III
36217 SUGAR CT
HILLIARD, FL 32046

2025

23-3N-24-3300-0099-0000

NASSAU COUNTY PROPERTY

BUILDING CHARACTERISTICS

ELEMENT	CD	CONSTRUCTION
Exterior Wall	31	HARDIE BRD 100
Roof Structur	08	IRREGULAR 100
Roof Cover	03	COMP SHNGL 90
Roof Cover	12	MODULAR MT 10
Interior Wall	05	DRYWALL 100
Interior Floo	13	LVT/LAMNT 60
Interior Floo	14	CARPET 40
Air Condition	03	CENTRAL 100
Heating Type	04	AIR DUCTED 100
Bedrooms		4 100
Bathrooms		3.5 100
Frame	02	WOOD FRAME 100
Stories	1.5	1.5 100
Units		0 100
Quality	03	Quality Level 03
DOR CODE	0100	SINGLE FAMILY
MAP NUM		MKT AREA 09
NEIGHBORHOOD/LOC	9016.00	

AREA TYPE	TOTAL GROSS AREA	PCT OF BASE	YEAR	TOT ADJ AREA	SUBAREA MARKET VALUE
BAS	2,071	100	2025	2,071	293,709
FGR	484	55	2025	266	37,724
FOP	144	30	2025	43	6,098
FOP	420	30	2025	126	17,869
FUS	372	100	2025	372	52,757
STR	52	10	2025	5	709
TOTALS	3,543			2,883	408,867

MARKET ADJUSTMENTS

TYPE	MDL	EFF. AREA	TOT ADJ PTS	EFF. BASE RATE	REPL. COST NEW	AYB	EYB	ECON	FNCT		NORM	% COND
0900	01	2,883	107.4420	141.82	408,867	2024	2024	0	0	0	0.00	100.00

1 SNGL FAM – 0% - 2025 Heated Area: 2443 HX Base Yr

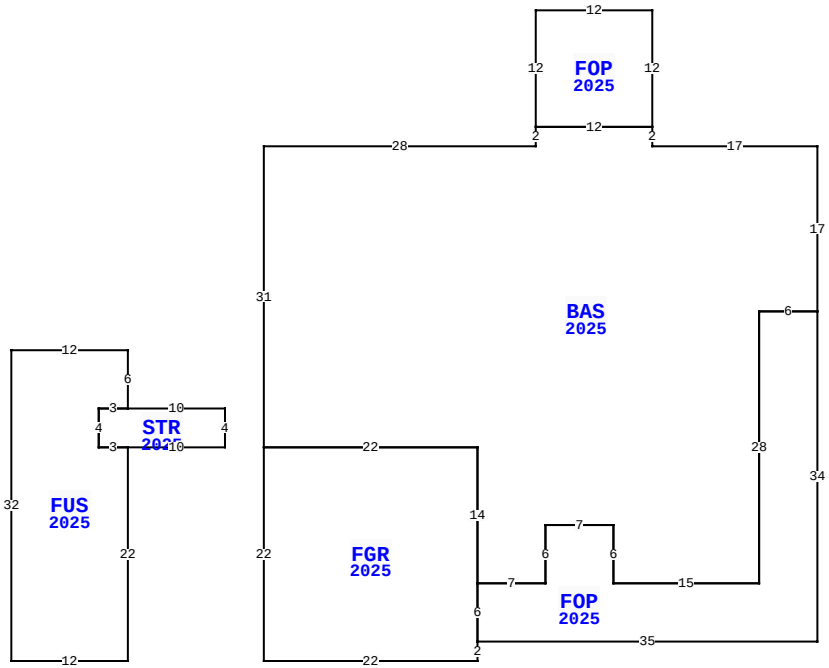

36217 SUGAR CT, HILLIARD

BLD DATE		LGL DATE	
XF DATE		LAND DATE	04/16/2025 MLU
INC DATE		AG DATE	

VALUATION SUMMARY

VALUATION BY	STANDARD
Tax Group: 4	Tax Dist:
BUILDING MARKET VALUE	408,867
TOTAL MARKET OB/XF VALUE	8,680
TOTAL LAND VALUE - MARKET	53,000
TOTAL MARKET VALUE	470,547
SOH/AGL Deduction	0
ASSESSED VALUE	470,547
TOTAL EXEMPTION VALUE	0
BASE TAXABLE VALUE	470,547
TOTAL JUST VALUE	470,547
NCON VALUE	417,547
INCOME VALUE	
PREVIOUS YEAR MKT VALUE	60,000

PERMIT NUM	DESCRIPTION	AMT	ISSUED
230004794			01/10/2024
230010955	NEW SFR	463,290	08/24/2023

SALES DATA

OFF RECORD Number	DATE	TYPE INST	Q U	V I	RSN CD	SALE PRICE
2692/974	1/31/2024	SW	Q	I	01	579,900

GRANTOR: LGI HOMES-FLORIDA LLC
GRANTEE: BRANCH MYRA KELLAM

BUILDING NOTES

BUILDING DIMENSIONS

BAS=[YR=2025;ORIG=42,5] S2 W28 S31 E22 S14 E7 N6 E7 S6 E15 N28 E6 N17 W17 N2 W12 $
FOP=[YR=2025;ORIG=71,24] W6 S28 W15 N6 W7 S6 W7 S6 E35 N34 $
FOP=[YR=2025;ORIG=54,-7] W12 S12 E12 N12 $
FGR=[YR=2025;ORIG=36,38] W22 S22 E22 N2 N6 N14 $
FUS=[YR=2025;ORIG=0,28] W12 S32 E12 N22 W3 N4 E3 N6 $
STR=[YR=2025;ORIG=10,34] W10 W3 S4 E3 E10 N4 $
.

EXTRA FEATURES

LN	OB/XF CODE	DESCRIPTION	BLD	CAP	L	W	UNITS	UT	Adj R	ADJ UNIT PRICE	ORIG COND	YEAR ON	YEAR ACTUAL	Q	% COND	OB/XF MKT VALUE	NOTES
1	0812	CONCRETE C	0	0	0	0	1,545.00	SF	4.00	4.00	100	2025	2024		100	6,180	
2	0600	SUMMER KIT	0	0	0	0	1.00	UT	2,500.00	2,500.00	100	2025	2024		100	2,500	

LAND DESCRIPTION

TOTAL OB/XF 8,680

LN	USE CODE	CLS	LAND USE DESCRIPTION	CAP	RD	LOC ZONE	FRONT	DEPTH	TOT LND UTS	UNIT TYPE	DT	DPTH FACT	% COND	TOT ADJ	UNIT PRICE	ADJ UNIT PRICE	LAND VALUE	OTHER ADJUSTMENTS AND NOTES	YEAR	DENSITY	DECL	FRZ	YR	CONSRV
1	000134	C	RES POND	0		OR	0.00	0.00	1.00	LT		1.00	1.00	1.00	53,000.00	53,000.00	53,000							

REVIEW DATE 05/31/2024 BY WW Total Acres: 0.00 Total Land Value: 53,000 Market: 0 Agricultural: 0 Common: 53,000 PRINTED 07/30/2025 BY SYS