LOT 1265
IN OR 2165/796
TOWN OF CRAWFORD

EDDY VONDA/EDDY MADISON
11239 BRADDOCK RD
JACKSONVILLE, FL 32219

2025

23-1N-24-2180-1265-0000

NASSAU COUNTY PROPERTY

BUILDING CHARACTERISTICS

ELEMENT	CD	CONSTRUCTION
Exterior Wall	31	HARDIE BRD 80
Exterior Wall	20	FACE BRICK 20
Roof Structur	08	IRREGULAR 100
Roof Cover	03	COMP SHNGL 100
Interior Wall	05	DRYWALL 100
Interior Floo	13	LVT/LAMNT 90
Interior Floo	11	CLAY TILE 10
Air Condition	03	CENTRAL 100
Heating Type	04	AIR DUCTED 100
Bedrooms		4 100
Bathrooms		2.5 100
Frame	02	WOOD FRAME 100
Stories	0	0 100
Units		0 100
Occupancy	00	NONE 100
Quality	03	Quality Level 03

DOR CODE	0100	SINGLE FAMILY	
MAP NUM		MKT AREA	08
NEIGHBORHOOD/LOC	8005.00		

AREA TYPE	TOTAL GROSS AREA	PCT OF BASE	YEAR	TOT ADJ AREA	SUBAREA MARKET VALUE
BAS	2,606	100	2020	2,606	348,369
FGR	659	55	2020	362	48,392
FOP	168	30	2020	50	6,684
FOP	210	30	2020	63	8,422
TOTALS	3,643			3,081	411,867

MARKET ADJUSTMENTS

TYPE	MDL	EFF. AREA	TOT ADJ PTS	EFF. BASE RATE	REPL. COST NEW	AYB	EYB	ECON	FNCT		NORM	% COND
0900	01	3,081	103.1320	136.13	419,417	2020	2020	0	0	0	1.80	98.20

1 SNGL FAM – 0% - 0 Heated Area: 2606 HX Base Yr

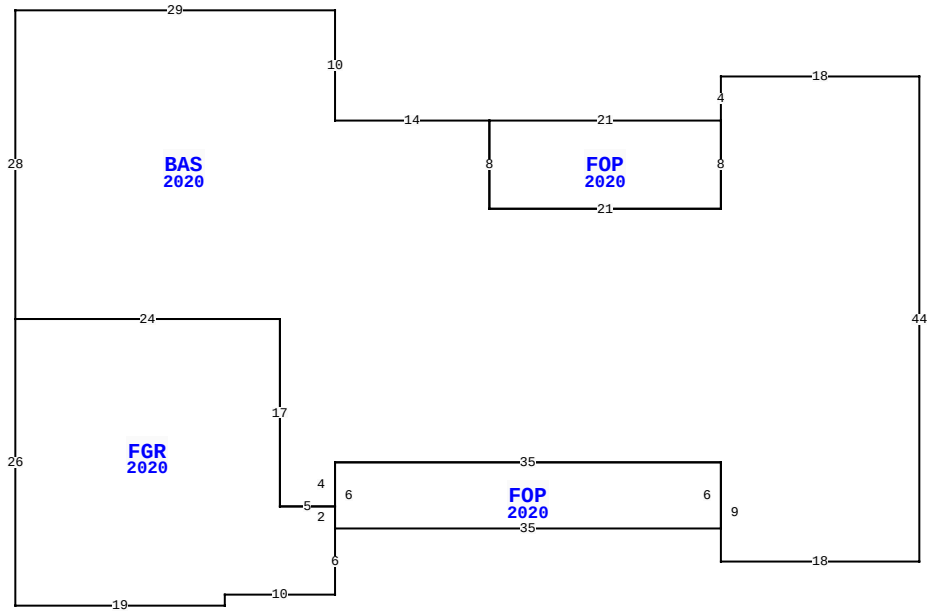

36001 SAGEBRUSH LN, CALLAHAN

BLD DATE		LGL DATE	
XF DATE		LAND DATE	05/21/2025 MLU
INC DATE		AG DATE	

VALUATION SUMMARY

VALUATION BY	STANDARD
Tax Group: 6	Tax Dist:
BUILDING MARKET VALUE	436,920
TOTAL MARKET OB/XF VALUE	4,598
TOTAL LAND VALUE - MARKET	165,750
TOTAL MARKET VALUE	607,268
SOH/AGL Deduction	0
ASSESSED VALUE	607,268
TOTAL EXEMPTION VALUE	0
BASE TAXABLE VALUE	607,268
TOTAL JUST VALUE	607,268
NCON VALUE	0
INCOME VALUE	
PREVIOUS YEAR MKT VALUE	582,325

PERMIT NUM	DESCRIPTION	AMT	ISSUED
22000720	GARAGE	62,275	01/12/2022
20004119	CO ISSUED	0	05/14/2020
19008576	NEW CONSTR	362,027	08/09/2019

SALES DATA

OFF RECORD Number	DATE	TYPE INST	Q / U	V / I	RSN CD	SALE PRICE
2165/0796	12/19/2017	WD	Q	V	02	82,500
GRANTOR: CAPPS EDWIN H & STACE						
GRANTEE: EDDY VONDA & MADISO						
1803/0784	6/28/2012	WD	U	I	11	100
GRANTOR: INTERNATIONAL PAPER R						
GRANTEE: WOOTEN THOMAS & OLI						

BUILDING NOTES

BUILDING DIMENSIONS

BAS=[YR=2020] W18 S4 FOP=[YR=2020] W21 S8 E21 N8$ S8 W21 N8 W14 N10 W29 S28 FGR=[YR=2020] S26 E19 N1 E10 N6 FOP=[YR=2020] E35 N6 W35 S6$ N2 W5 N17 W24$ E24 S17 E5 N4 E35 S9 E18 N44$.

EXTRA FEATURES

LN	OB/XF CODE	DESCRIPTION	BLD	CAP	L	W	UNITS	UT	Adj R	ADJ UNIT PRICE	ORIG COND	YEAR ON	YEAR ACTUAL	Q	% COND	OB/XF MKT VALUE	NOTES
1	0812	CONCRETE C	0	0	0	0	1,173.00	SF	4.00	4.00	100	2020	2020	3	98	4,598	

LAND DESCRIPTION

TOTAL OB/XF 4,598

LN	USE CODE	CLS	LAND USE DESCRIPTION	CAP	RD	LOC ZONE	FRONT	DEPTH	TOT LND UTS	UNIT TYPE	DT	DPTH FACT	% COND	TOT ADJ	UNIT PRICE	ADJ UNIT PRICE	LAND VALUE	OTHER ADJUSTMENTS AND NOTES	YEAR	DENSITY	DECL	FRZ	YR	CONSRV
1	000100	C	RES	0		OR	0.00	0.00	10.00	AC		1.00	1.00	0.85	19,500.00	16,575.00	165,750							

REVIEW DATE 05/08/2024 BY TWA Total Acres: 10.00 Total Land Value: 165,750 Market: 0 Agricultural: 0 Common: 165,750 PRINTED 07/30/2025 BY SYS

LOT 1265
IN OR 2165/796
TOWN OF CRAWFORD

EDDY VONDA/EDDY MADISON
11239 BRADDOCK RD
JACKSONVILLE, FL 32219

2025

23-1N-24-2180-1265-0000

NASSAU COUNTY PROPERTY

BUILDING CHARACTERISTICS

ELEMENT	CD	CONSTRUCTION
Exterior Wall	25	MOD METAL 100
Roof Structur	03	GABLE/HIP 100
Roof Cover	12	MODULAR MT 100
Interior Wall	07	NONE 100
Interior Floo	03	CONC FINSH 100
Interior Floo	01	NONE 0
Air Condition	01	NONE 100
Heating Type	01	NONE 100
Bedrooms		N/A 100
Bathrooms		N/A 100
Frame	05	STEEL 100
Stories	1.	1. 100
Units		0 100
Quality	06	Quality Level 06

DOR CODE 0100 SINGLE FAMILY
MAP NUM | MKT AREA 08
NEIGHBORHOOD/LOC 8005.00

AREA TYPE	TOTAL GROSS AREA	PCT OF BASE	YEAR	TOT ADJ AREA	SUBAREA MARKET VALUE
BAS	1,040	100	2023	1,040	21,148
UCP	480	20	2023	96	1,952
UCP	480	20	2023	96	1,952
TOTALS	2,000			1,232	25,053

MARKET ADJUSTMENTS

TYPE	MDL	EFF. AREA	TOT ADJ PTS	EFF. BASE RATE	REPL. COST NEW	AYB	EYB	ECON	FNCT		NORM	% COND
6500	01	1,232	56.0740	20.75	25,564	2022	2022	0	0	0	2.00	98.00

2 GARAGE RES – 0% - 2023 Heated Area: 1040 HX Base Yr

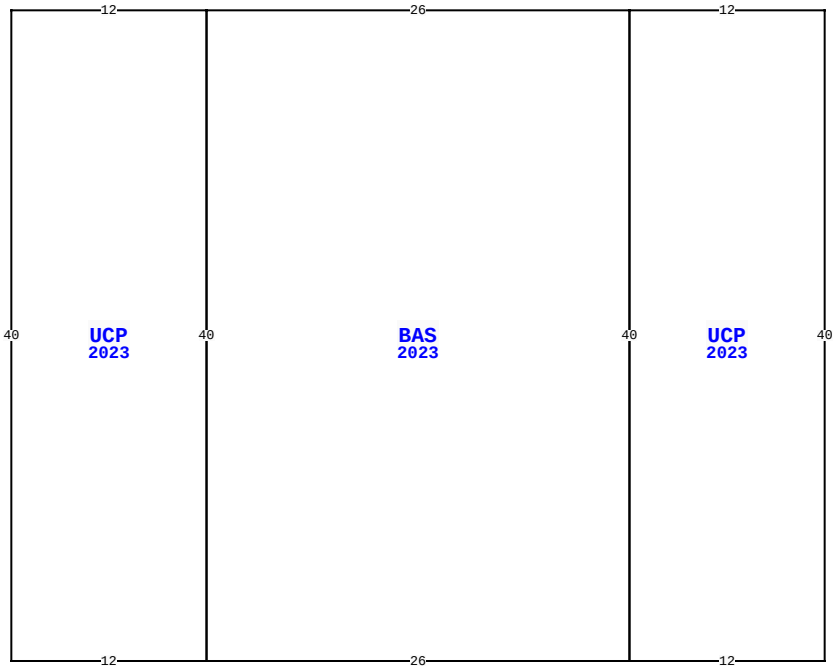

36001 SAGEBRUSH LN, CALLAHAN

BLD DATE		LGL DATE	
XF DATE		LAND DATE	05/21/2025 MLU
INC DATE		AG DATE	

VALUATION SUMMARY

VALUATION BY	STANDARD
Tax Group: 6	Tax Dist:
BUILDING MARKET VALUE	436,920
TOTAL MARKET OB/XF VALUE	4,598
TOTAL LAND VALUE - MARKET	165,750
TOTAL MARKET VALUE	607,268
SOH/AGL Deduction	0
ASSESSED VALUE	607,268
TOTAL EXEMPTION VALUE	0
BASE TAXABLE VALUE	607,268
TOTAL JUST VALUE	607,268
NCON VALUE	0
INCOME VALUE	
PREVIOUS YEAR MKT VALUE	582,325

PERMIT NUM	DESCRIPTION	AMT	ISSUED

SALES DATA

OFF RECORD Number	DATE	TYPE INST	Q / U	V / I	RSN CD	SALE PRICE
2165/0796	12/19/2017	WD	Q	V	02	82,500
GRANTOR: CAPPS EDWIN H & STACE						
GRANTEE: EDDY VONDA & MADISO						
1803/0784	6/28/2012	WD	U	I	11	100
GRANTOR: INTERNATIONAL PAPER R						
GRANTEE: WOOTEN THOMAS & OLI						

BUILDING NOTES

BUILDING DIMENSIONS

BAS=[YR=2023;ORIG=60,10] E26 S40 W26 N40 $
UCP=[YR=2023;ORIG=48,10] E12 S40 W12 N40 $
UCP=[YR=2023;ORIG=86,10] E12 S40 W12 N40 $
.

EXTRA FEATURES

L N	OB/XF CODE	DESCRIPTION	BLD	CAP	L	W	UNITS	UT	Adj R	ADJ UNIT PRICE	ORIG COND	YEAR ON	YEAR ACTUAL	Q	% COND	OB/XF MKT VALUE	NOTES

LAND DESCRIPTION

TOTAL OB/XF 0

L N	USE CODE	CLS	LAND USE DESCRIPTION	CAP	R D	LOC ZONE	FRONT	DEPTH	TOT LND UTS	UNIT TYPE	D T	DPTH FACT	% COND	TOT ADJ	UNIT PRICE	ADJ UNIT PRICE	LAND VALUE	OTHER ADJUSTMENTS AND NOTES	YEAR	DENSITY	DECL	FRZ	YR	CONSRV

REVIEW DATE 05/08/2024 BY TWA Total Acres: 10.00 Total Land Value: 165,750 Market: 0 Agricultural: 0 Common: 165,750 PRINTED 07/30/2025 BY SYS