LOT 76
DEEP CREEK PLANTATION PB 7/239

MENTUS TIMOTHY LEO & HEATHER ANN
13314 SHORT CT
BRYCEVILLE, FL 32009

2025

23-1N-23-034D-0076-0000

BUILDING CHARACTERISTICS

ELEMENT	CD	CONSTRUCTION
Exterior Wall	20	FACE BRICK 100
Roof Structur	03	GABLE/HIP 100
Roof Cover	03	COMP SHNGL 100
Interior Wall	05	DRYWALL 100
Interior Floo	13	LVT/LAMNT 100
Air Condition	03	CENTRAL 100
Heating Type	04	AIR DUCTED 100
Bedrooms		3 100
Bathrooms		2.5 100
Frame	02	WOOD FRAME 100
Stories	1.	1. 100
Units		0 100
Quality	01	Quality Level 01

DOR CODE 0100 SINGLE FAMILY
MAP NUM | MKT AREA 09
NEIGHBORHOOD/LOC 9006.00

AREA TYPE	TOTAL GROSS AREA	PCT OF BASE	YEAR	TOT ADJ AREA	SUBAREA MARKET VALUE
BAS	2,257	100	2025	2,257	338,911
FGR	702	55	2025	386	57,962
FOP	54	30	2025	16	2,403
FOP	153	30	2025	46	6,907
FST	40	55	2025	22	3,304
TOTALS	3,206			2,727	409,486

MARKET ADJUSTMENTS

TYPE	MDL	EFF. AREA	TOT ADJ PTS	EFF. BASE RATE	REPL. COST NEW	AYB	EYB	ECON	FNCT		NORM	% COND
0500	01	2,727	95.0400	150.16	409,486	2024	2024	0	0	0	0.00	100.00

1 SFR CUST – 100% - 2025 Heated Area: 2257 HX Base Yr 2025

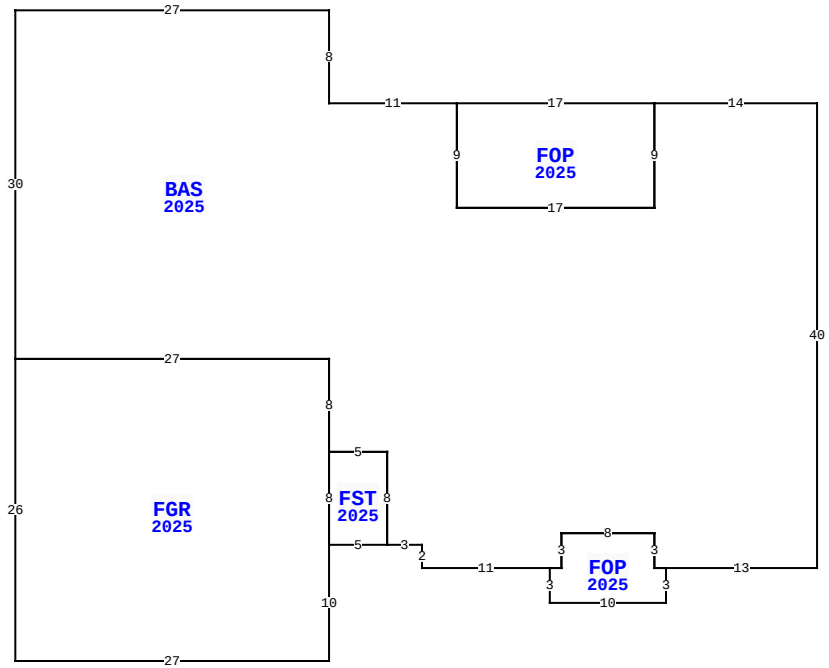

13314 SHORT CT, BRYCEVILLE

BLD DATE		LGL DATE	
XF DATE		LAND DATE	05/01/2025 MLU
INC DATE		AG DATE	

NASSAU COUNTY PROPERTY

PAGE 1 of 1 6

VALUATION SUMMARY

VALUATION BY		STANDARD
Tax Group: 6	Tax Dist:	
BUILDING MARKET VALUE		409,486
TOTAL MARKET OB/XF VALUE		0
TOTAL LAND VALUE - MARKET		96,780
TOTAL MARKET VALUE		506,266
SOH/AGL Deduction		96,193
ASSESSED VALUE		410,073
TOTAL EXEMPTION VALUE	HX HB	50,722
BASE TAXABLE VALUE		359,351
TOTAL JUST VALUE		506,266
NCON VALUE		409,486
INCOME VALUE		
PREVIOUS YEAR MKT VALUE		82,900

PERMIT NUM	DESCRIPTION	AMT	ISSUED
CO240014290	PRIVATE PROVIDER	424,371	12/31/2024
B240005204	PRIVATE PROVIDER	424,371	04/30/2024

SALES DATA

OFF RECORD Number	DATE	TYPE INST	Q U	V I	RSN CD	SALE PRICE
2653/1465	7/14/2023	WD	Q	V	01	92,500
GRANTOR: DONALDSON JOHN						
GRANTEE: MENTUS TIMOTHY LEO						
1732/1495	3/28/2011	WD	U	V	30	126,100
GRANTOR: COLYER DONALDSON & JA						
GRANTEE: DONALDSON JOHN						

BUILDING NOTES

BUILDING DIMENSIONS

FOP=[YR=2025;ORIG=59,0] E17 S9 W17 N9 $
FOP=[YR=2025;ORIG=68,37] E8 S3 E1 S3 W10 N3 E1 N3 $
FGR=[YR=2025;ORIG=21,22] E27 S8 S8 S10 W27 N26 $
BAS=[YR=2025;ORIG=90,0] W14 S9 W17 N9 W11 N8 W27 S30 E27 S8 E5 S8 E3 S2 E11 E1 N3 E8 S3 E1 E13 N40 $
FST=[YR=2025;ORIG=48,30] E5 S8 W5 N8 $
.

EXTRA FEATURES

LN	OB/XF CODE	DESCRIPTION	BLD	CAP	L	W	UNITS	UT	Adj R	ADJ UNIT PRICE	ORIG COND	YEAR ON	YEAR ACTUAL	Q	% COND	OB/XF MKT VALUE	NOTES

LAND DESCRIPTION

TOTAL OB/XF 0

LN	USE CODE	CLS	LAND USE DESCRIPTION	CAP	RD	LOC ZONE	FRONT	DEPTH	TOT LND UTS	UNIT TYPE	DT	DPTH FACT	% COND	TOT ADJ	UNIT PRICE	ADJ UNIT PRICE	LAND VALUE	OTHER ADJUSTMENTS AND NOTES	YEAR	DENSITY	DECL	FRZ	YR	CONSRV
1	000100	C	RES	100	0006	OR	0.00	0.00	3.62	AC		1.00	1.00	1.00	19,000.00	19,000.00	68,780							
2	009605	C	WETLANDS	100	0006	OR	0.00	0.00	3.50	AC		1.00	1.00	1.00	8,000.00	8,000.00	28,000							

REVIEW DATE 12/30/2024 BY WWX Total Acres: 7.12 Total Land Value: 96,780 Market: 0 Agricultural: 0 Common: 96,780 PRINTED 07/30/2025 BY SYS