LOT 10
DEEP CREEK PLANTATION PB 7/239

JONES KENRICK & JOAHAN
13562 SETTINDOWN DR
BRYCEVILLE, FL 32009

2025

23-1N-23-034D-0010-0000

BUILDING CHARACTERISTICS

ELEMENT	CD	CONSTRUCTION
Exterior Wall	16	WD FR STUC 100
Roof Structur	03	GABLE/HIP 100
Roof Cover	03	COMP SHNGL 100
Interior Wall	05	DRYWALL 100
Interior Floo	11	CLAY TILE 100
Air Condition	03	CENTRAL 100
Heating Type	04	AIR DUCTED 100
Bedrooms		4 100
Bathrooms		2.5 100
Frame	02	WOOD FRAME 100
Stories	1.	1. 100
Units		0 100
Quality	01	Quality Level 01

DOR CODE	0100	SINGLE FAMILY	
MAP NUM		MKT AREA	09
NEIGHBORHOOD/LOC	9006.00		

AREA TYPE	TOTAL GROSS AREA	PCT OF BASE	YEAR	TOT ADJ AREA	SUBAREA MARKET VALUE
BAS	3,054	100	2025	3,054	465,124
FGR	368	55	2025	202	30,765
FGR	668	55	2025	367	55,894
FOP	107	30	2025	32	4,874
FOP	276	30	2025	83	12,641
FST	45	55	2025	25	3,808
TOTALS	4,518			3,763	573,105

MARKET ADJUSTMENTS

TYPE	MDL	EFF. AREA	TOT ADJ PTS	EFF. BASE RATE	REPL. COST NEW	AYB	EYB	ECON	FNCT		NORM	% COND
0500	01	3,763	96.3900	152.30	573,105	2024	2024	0	0	0	0.00	100.00

1 SFR CUST – 100% - 2025 Heated Area: 3054 HX Base Yr 2025

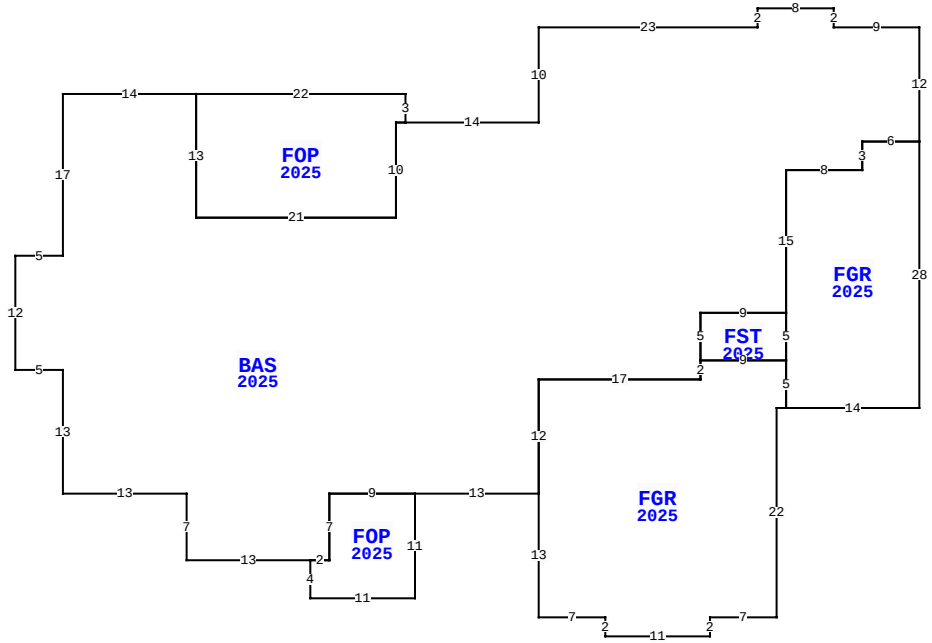

13562 SETTINDOWN DR, BRYCEVILLE

BLD DATE		LGL DATE	
XF DATE		LAND DATE	04/29/2025 MLU
INC DATE		AG DATE	

NASSAU COUNTY PROPERTY

PAGE 1 of 1 6

VALUATION SUMMARY

VALUATION BY		STANDARD
Tax Group: 6	Tax Dist:	
BUILDING MARKET VALUE		573,105
TOTAL MARKET OB/XF VALUE		14,780
TOTAL LAND VALUE - MARKET		70,680
TOTAL MARKET VALUE		658,565
SOH/AGL Deduction		0
ASSESSED VALUE		658,565
TOTAL EXEMPTION VALUE	HX HB	50,722
BASE TAXABLE VALUE		607,843
TOTAL JUST VALUE		658,565
NCON VALUE		587,885
INCOME VALUE		
PREVIOUS YEAR MKT VALUE		74,400

PERMIT NUM	DESCRIPTION	AMT	ISSUED
CO240009499	PRIVATE PROVIDER	585,135	08/15/2024
230012199	NEW SFR	585,135	09/21/2023

SALES DATA

OFF RECORD Number	DATE	TYPE INST	Q U	V I	RSN CD	SALE PRICE
2492/1310	8/31/2021	WD	Q	V	01	70,000
GRANTOR: GIBSON STEVEN & BRITT						
GRANTEE: JONES KENRICK & JOA						
2407/0162	11/09/2020	WD	Q	V	01	48,000
GRANTOR: BLANTON ROGER & DIANE						
GRANTEE: GIBSON STEVEN & BRI						

BUILDING NOTES

BUILDING DIMENSIONS

FGR=[YR=2025;ORIG=106,-1] E8 N3 E6 S28 W14 N5 N5 N15 $
FGR=[YR=2025;ORIG=80,21] E17 N2 E9 S5 W1 S22 W7 S2 W11 N2 W7 N13 N12 $
FOP=[YR=2025;ORIG=58,33] E9 S11 W11 N4 E2 N7 $
FOP=[YR=2025;ORIG=44,-9] E22 S3 W1 S10 W21 N13 $
FST=[YR=2025;ORIG=106,19] W9 N5 E9 S5 $
BAS=[YR=2025;ORIG=30,33] N13 W5 N12 E5 N17 E14 S13 E21 N10 E1 E14 N10 E23 N2 E8 S2 E9 S12 W6 S3 W8 S15 W9 S5 S2 W17 S12 W13 W9 S7 W2 W13 N7 W13 $
.

EXTRA FEATURES

LN	OB/XF CODE	DESCRIPTION	BLD	CAP	L	W	UNITS	UT	Adj R	ADJ UNIT PRICE	ORIG COND	YEAR ON	YEAR ACTUAL	Q	% COND	OB/XF MKT VALUE	NOTES
1	0812	CONCRETE C	0	100	0	0	2,820.00	SF	4.00	4.00	100	2025	2024		100	11,280	
2	0500	FP-PRE FAB	0	100	0	0	1.00	UT	3,500.00	3,500.00	100	2025	2024		100	3,500	

LAND DESCRIPTION

TOTAL OB/XF 14,780

LN	USE CODE	CLS	LAND USE DESCRIPTION	CAP	RD	LOC ZONE	FRONT	DEPTH	TOT LND UTS	UNIT TYPE	DT	DPTH FACT	% COND	TOT ADJ	UNIT PRICE	ADJ UNIT PRICE	LAND VALUE	OTHER ADJUSTMENTS AND NOTES	YEAR	DENSITY	DECL	FRZ	YR	CONSRV
1	000100	C	RES	100	0006	OR	0.00	0.00	3.72	AC		1.00	1.00	1.00	19,000.00	19,000.00	70,680							

REVIEW DATE 09/17/2024 BY MLU Total Acres: 3.72 Total Land Value: 70,680 Market: 0 Agricultural: 0 Common: 70,680 PRINTED 07/30/2025 BY SYS