PT E1/2 OF LOT 8 PAR 8-1
PT OR 2506/1682
DUNNS SURVEY DBK B-10/48

BUCKLAND KARA
95114 CORNFLOWER DR
FERNANDINA BEACH, FL 32034

2025

22-3N-24-2320-0008-0010

NASSAU COUNTY PROPERTY

BUILDING CHARACTERISTICS

ELEMENT	CD	CONSTRUCTION
Exterior Wall	13	PREFAB PNL 100
Roof Structur	03	GABLE/HIP 100
Roof Cover	12	MODULAR MT 100
Interior Wall	05	DRYWALL 100
Interior Floo	14	CARPET 70
Interior Floo	08	SHT VINYL 30
Air Condition	03	CENTRAL 100
Heating Type	04	AIR DUCTED 100
Bedrooms		3 100
Bathrooms		1.5 100
Frame	02	WOOD FRAME 100
Stories	1.	1. 100
Units		0 100
BUD8 Adjustme	04	DIST 01 100
Occupancy	00	NONE 100
Quality	03	Quality Level 03

DOR CODE	0100	SINGLE FAMILY	
MAP NUM		MKT AREA	09
NEIGHBORHOOD/LOC	9001.00		

AREA TYPE	TOTAL GROSS AREA	PCT OF BASE	YEAR	TOT ADJ AREA	SUBAREA MARKET VALUE
BAS	1,302	100	1993	1,302	115,631
BAS	128	100	2015	128	11,368
DCK	64	10	1993	6	533
FOP	128	30	1993	38	3,375
UST	24	45	2015	11	977
TOTALS	1,646			1,485	131,883

MARKET ADJUSTMENTS

TYPE	MDL	EFF. AREA	TOT ADJ PTS	EFF. BASE RATE	REPL. COST NEW	AYB	EYB	ECON	FNCT		NORM	% COND
0100	01	1,485	107.0000	107.00	158,895	1965	1990	0	0	0	17.00	83.00

1 SINGLE FAM – 0% - 0 Heated Area: 1430 HX Base Yr

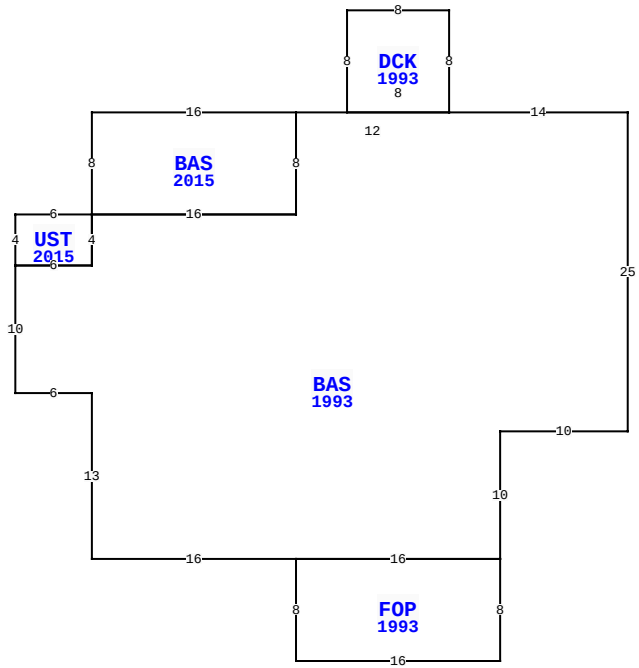

36551 PRATT SIDING RD, CALLAHAN

BLD DATE	06/05/2008	JH	LGL DATE	
XF DATE			LAND DATE	05/21/2025 MLU
INC DATE			AG DATE	

VALUATION SUMMARY

VALUATION BY	STANDARD
Tax Group: 4	Tax Dist:
BUILDING MARKET VALUE	131,883
TOTAL MARKET OB/XF VALUE	1,248
TOTAL LAND VALUE - MARKET	45,000
TOTAL MARKET VALUE	178,131
SOH/AGL Deduction	5,005
ASSESSED VALUE	173,126
TOTAL EXEMPTION VALUE	0
BASE TAXABLE VALUE	173,126
TOTAL JUST VALUE	178,131
NCON VALUE	0
INCOME VALUE	
PREVIOUS YEAR MKT VALUE	157,387

PERMIT NUM	DESCRIPTION	AMT	ISSUED
E962694	CHNGE SRVC	0	02/01/1996

SALES DATA

OFF RECORD Number	DATE	TYPE INST	Q / U	V / I	RSN CD	SALE PRICE
2506/1682	10/18/2021	PR	U	I	19	100
GRANTOR: BUCKLAND KARA P/R OF						
GRANTEE: BUCKLAND KARA						
1765/0109	9/20/2011	QC	U	I	12	63,270
GRANTOR: KELLEY JODY & RAY THO						
GRANTEE: SMITH KATHY E						

BUILDING NOTES

BUILDING DIMENSIONS

BAS=[YR=1993] W14 DCK=[YR=1993] N8 W8 S8 E8$ W12
BAS=[YR=2015] W16 S8 UST=[YR=2015] W6 S4 E6 N4$ E16 N8$ S8
W16 S4 W6 S10 E6 S13 E16 FOP=[YR=1993] S8 E16 N8 W16$ E16 N10
E10 N25$.

EXTRA FEATURES

LN	OB/XF CODE	DESCRIPTION	BLD	CAP	L	W	UNITS	UT	Adj R	ADJ UNIT PRICE	ORIG COND	YEAR ON	YEAR ACTUAL	Q	% COND	OB/XF MKT VALUE	NOTES
1	0940	SHEDS/PORT	0	0	8	8	64.00	SF	30.00	30.00	100	2015	2015	3	65	1,248	

LAND DESCRIPTION

TOTAL OB/XF 1,248

LN	USE CODE	CLS	LAND USE DESCRIPTION	CAP	RD	LOC ZONE	FRONT	DEPTH	TOT LND UTS	UNIT TYPE	DT	DPTH FACT	% COND	TOT ADJ	UNIT PRICE	ADJ UNIT PRICE	LAND VALUE	OTHER ADJUSTMENTS AND NOTES	YEAR	DENSITY	DECL	FRZ	YR	CONSRV
1	000100	C	RES	0	0005	OR	150.00	291.00	1.00	AC		1.00	1.00	1.00	45,000.00	45,000.00	45,000							

REVIEW DATE 06/02/2020 BY TWA Total Acres: 1.00 Total Land Value: 45,000 Market: 0 Agricultural: 0 Common: 45,000 PRINTED 07/30/2025 BY SYS