NE1/4 OF NE1/4 OF
SEC 22-1S-23E IN OR 1625/780
& ESMT IN OR 814/1671 (EX ESMT

STOKES KAY B REVOCABLE LIVING TRUST/STOKES KAY B T
3998 CR 119
BRYCEVILLE, FL 32009

2025

22-1S-23-0000-0001-0000

NASSAU COUNTY PROPERTY

BUILDING CHARACTERISTICS

ELEMENT	CD	CONSTRUCTION
Exterior Wall	20	FACE BRICK 100
Roof Structur	08	IRREGULAR 100
Roof Cover	03	COMP SHNGL 100
Interior Wall	05	DRYWALL 100
Interior Floo	11	CLAY TILE 70
Interior Floo	14	CARPET 30
Air Condition	03	CENTRAL 100
Heating Type	04	AIR DUCTED 100
Bedrooms		3 100
Bathrooms		2.5 100
Frame	02	WOOD FRAME 100
Stories	1.	1. 100
Units		0 100
BUD8 Adjustme	06	DIST 1D 100
Occupancy	00	NONE 100
Quality	04	Quality Level 04
DOR CODE	5000	IMPROVED AG
MAP NUM		MKT AREA 09
NEIGHBORHOOD/LOC	9001.00	

AREA TYPE	TOTAL GROSS AREA	PCT OF BASE	YEAR	TOT ADJ AREA	SUBAREA MARKET VALUE
BAS	1,448	100	1993	1,448	137,178
BAS	1,233	100	2006	1,233	116,809
FGR	992	55	2006	546	51,726
FOP	204	30	1993	61	5,779
FOP	616	30	2006	185	17,526
TOTALS	4,493			3,473	329,018

MARKET ADJUSTMENTS

TYPE	MDL	EFF. AREA	TOT ADJ PTS	EFF. BASE RATE	REPL. COST NEW	AYB	EYB	ECON	FNCT		NORM	% COND
0100	01	3,473	124.0050	124.00	430,652	1964	1992	0	0	0	23.60	76.40

1 SINGLE FAM – 100% - 0 Heated Area: 2681 HX Base Yr 2019

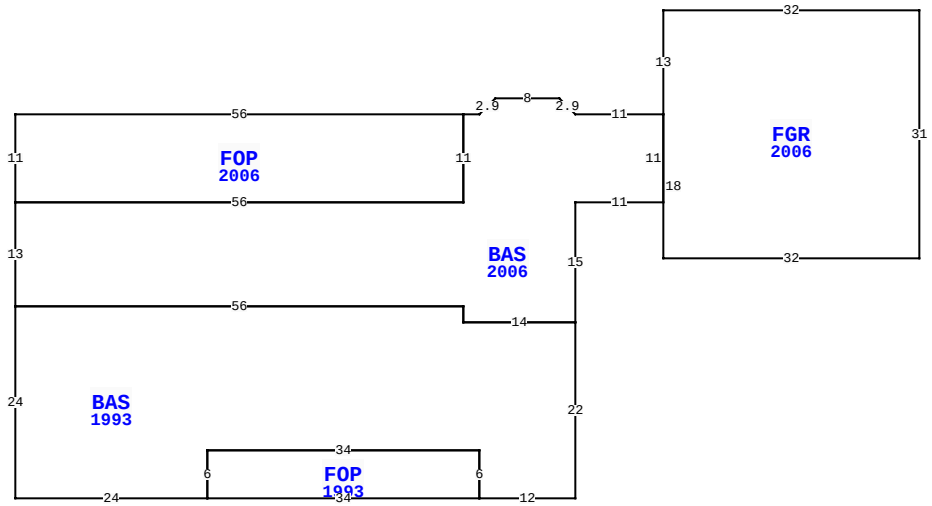

3998 CR 119, BRYCEVILLE

BLD DATE		LGL DATE	
XF DATE		LAND DATE	05/21/2025 MLU
INC DATE		AG DATE	03/14/2024 DC

VALUATION SUMMARY

VALUATION BY		STANDARD
Tax Group: 6	Tax Dist:	
BUILDING MARKET VALUE		357,951
TOTAL MARKET OB/XF VALUE		20,244
TOTAL LAND VALUE - MARKET		376,500
TOTAL MARKET VALUE		436,843
SOH/AGL Deduction		173,926
ASSESSED VALUE		262,917
TOTAL EXEMPTION VALUE	HX HB	50,722
BASE TAXABLE VALUE		212,195
TOTAL JUST VALUE		754,695
NCON VALUE		0
INCOME VALUE		
PREVIOUS YEAR MKT VALUE		705,502

PERMIT NUM	DESCRIPTION	AMT	ISSUED
21009447	NEW SHINGLES	25,790	07/20/2021
B17381	ADDITION	107,500	10/31/2006
R09316	REPAIR/RRF	8,000	05/01/2006
E17061	ELEC OTHER	0	04/01/2006

SALES DATA

OFF RECORD Number	DATE	TYPE INST	Q U	V I	RSN CD	SALE PRICE
1625/0780	6/10/2009	QC	U	I	30	100

GRANTOR: STOKES HAROLD F & KAY
GRANTEE: STOKES HAROLD F & K

BUILDING NOTES

BUILDING DIMENSIONS

BAS=[YR=2006] W11 L2 U2 W8 D2 L2 W2 FOP=[YR=2006] W56 S11 E56N11 $ S11 W56 S13 BAS=[YR=1993] S24 E24 FOP=[YR=1993] E34 N6 W34 S6 $ N6 E34 S6 E12 N22 W14 N2 W56 $ E56 S2 E14 N15 E11 N11 $ FGR=[YR=2006] N13 E32 S31 W32 N18 $.

EXTRA FEATURES

LN	OB/XF CODE	DESCRIPTION	BLD	CAP	L	W	UNITS	UT	Adj R	ADJ UNIT PRICE	ORIG COND	YEAR ON	YEAR ACTUAL	Q	% COND	OB/XF MKT VALUE	NOTES
1	0861	POOL GUNIT	0	100	0	0	480.00	SF	85.00	85.00	100	1981	1981	3	20	8,160	
2	0500	FP-PRE FAB	0	100	0	0	1.00	UT	3,500.00	3,500.00	100	1964	1964	3	25	875	
3	0811	CONCRETE B	0	100	0	0	800.00	SF	5.20	5.20	100	2006	2006	3	86	3,578	
4	0810	CONCRETE A	0	100	0	0	159.00	SF	6.50	6.50	100	2003	2003	3	82	847	
5	0845	KOOL DECK	0	100	0	0	770.00	SF	7.25	7.25	100	1990	1990	3	57	3,182	
6	0825	BRICK	0	100	0	0	339.00	SF	12.50	12.50	100	1990	1990	3	85	3,602	

LAND DESCRIPTION

TOTAL OB/XF 20,244

LN	USE CODE	CLS	LAND USE DESCRIPTION	CAP	RD	LOC ZONE	FRONT	DEPTH	TOT LND UTS	UNIT TYPE	DT	DPTH FACT	% COND	TOT ADJ	UNIT PRICE	ADJ UNIT PRICE	LAND VALUE	OTHER ADJUSTMENTS AND NOTES	YEAR	DENSITY	DECL	FRZ	YR	CONSRV
1	005000	C	AGRICULTURAL	100		OR	0.00	0.00	1.00	AC		1.00	1.00	1.00	45,000.00	45,000.00	45,000							
2	005600	A	TIMBER 3 N S	0		OR	0.00	0.00	20.75	AC		1.00	1.00	1.00	390.00	390.00	8,092							
3	006000	A	PASTURE - HA	0		OR	0.00	0.00	10.00	AC		1.00	1.00	1.00	370.00	370.00	3,700							
4	005901	A	HARDWOOD SI	0		OR	0.00	0.00	8.25	AC		1.00	1.00	1.00	225.00	225.00	1,856							
5	009910	M	MARKET VALUE	0		OR	0.00	0.00	39.00	AC		1.00	1.00	1.00	8,500.00	8,500.00	331,500							

REVIEW DATE 03/09/2020 BY TWA Total Acres: 40.00 Total Land Value: 58,648 Market: 331,500 Agricultural: 13,648 Common: 45,000 PRINTED 07/30/2025 BY SYS

NE1/4 OF NE1/4 OF
SEC 22-1S-23E IN OR 1625/780
& ESMT IN OR 814/1671 (EX ESMT

STOKES KAY B REVOCABLE LIVING TRUST/STOKES KAY B T
3998 CR 119
BRYCEVILLE, FL 32009

2025

22-1S-23-0000-0001-0000

BUILDING CHARACTERISTICS

ELEMENT	CD	CONSTRUCTION
Exterior Wall	12	CEDAR 70
Exterior Wall	05	AVERAGE 30
Roof Structur	03	GABLE/HIP 100
Roof Cover	01	MINIMUM 100
Interior Wall	01	MINIMUM 80
Interior Wall	05	DRYWALL 20
Interior Floo	03	CONC FINSH 100
Air Condition	01	NONE 100
Heating Type	01	NONE 100
Bedrooms		0 100
Bathrooms		0 100
Frame	02	WOOD FRAME 100
Stories	0	0 100
Units		0 100
Occupancy	00	NONE 100
Quality	03	Quality Level 03
DOR CODE	5000	IMPROVED AG
MAP NUM		MKT AREA 09
NEIGHBORHOOD/LOC	9001.00	

AREA TYPE	TOTAL GROSS AREA	PCT OF BASE	YEAR	TOT ADJ AREA	SUBAREA MARKET VALUE
BAS	1,660	100	2006	1,660	28,152
FOP	65	30	2006	20	339
UCP	130	20	2006	26	441
TOTALS	1,855			1,706	28,933

MARKET ADJUSTMENTS

TYPE	MDL	EFF. AREA	TOT ADJ PTS	EFF. BASE RATE	REPL. COST NEW	AYB	EYB	ECON	FNCT		NORM	% COND
6500	01	1,706	67.4000	24.94	42,548	2003	2003	0	0	0	32.00	68.00

2 GARAGE RES – 100% - 0 Heated Area: 1660 HX Base Yr 2019

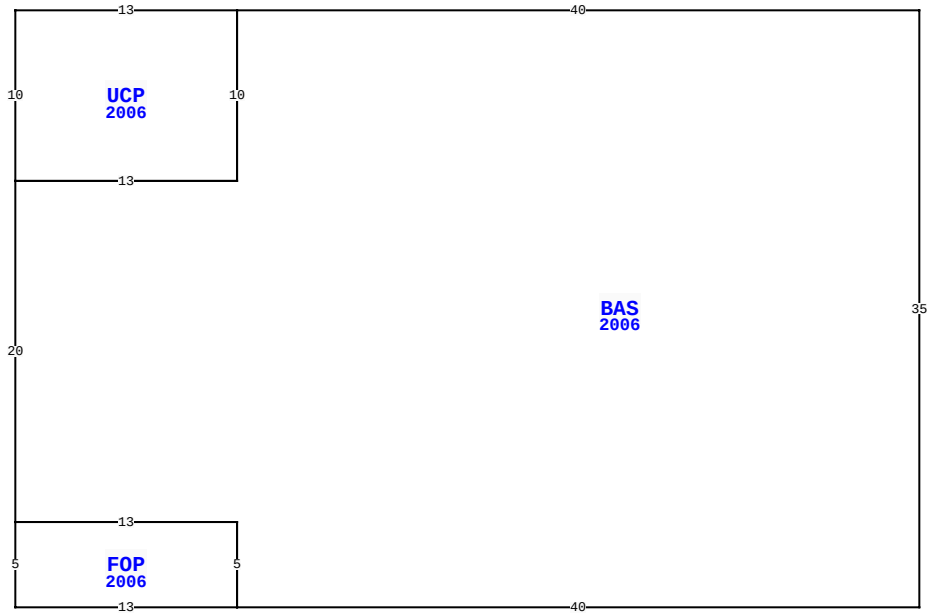

3998 CR 119, BRYCEVILLE

BLD DATE		LGL DATE	
XF DATE		LAND DATE	05/21/2025 MLU
INC DATE		AG DATE	03/14/2024 DC

NASSAU COUNTY PROPERTY

VALUATION SUMMARY

VALUATION BY		STANDARD
Tax Group: 6	Tax Dist:	
BUILDING MARKET VALUE		357,951
TOTAL MARKET OB/XF VALUE		20,244
TOTAL LAND VALUE - MARKET		376,500
TOTAL MARKET VALUE		436,843
SOH/AGL Deduction		173,926
ASSESSED VALUE		262,917
TOTAL EXEMPTION VALUE	HX HB	50,722
BASE TAXABLE VALUE		212,195
TOTAL JUST VALUE		754,695
NCON VALUE		0
INCOME VALUE		
PREVIOUS YEAR MKT VALUE		705,502

PERMIT NUM	DESCRIPTION	AMT	ISSUED

SALES DATA

OFF RECORD Number	DATE	TYPE INST	Q / U	V / I	RSN CD	SALE PRICE
1625/0780	6/10/2009	QC	U	I	30	100

GRANTOR: STOKES HAROLD F & KAY

GRANTEE: STOKES HAROLD F & K

BUILDING NOTES

BUILDING DIMENSIONS

BAS=[YR=2006] W40 UCP=[YR=2006] W13 S10 E13 N10 $ S10 W13 S20 FOP=[YR=2006] S5 E13 N5 W13 $ E13 S5 E40 N35 $.

EXTRA FEATURES

LN	OB/XF CODE	DESCRIPTION	BLD	CAP	L	W	UNITS	UT	Adj R	ADJ UNIT PRICE	ORIG COND	YEAR ON	YEAR ACTUAL	Q	% COND	OB/XF MKT VALUE	NOTES

LAND DESCRIPTION

TOTAL OB/XF 0

LN	USE CODE	CLS	LAND USE DESCRIPTION	CAP	RD	LOC ZONE	FRONT	DEPTH	TOT LND UTS	UNIT TYPE	DT	DPTH FACT	% COND	TOT ADJ	UNIT PRICE	ADJ UNIT PRICE	LAND VALUE	OTHER ADJUSTMENTS AND NOTES	YEAR	DENSITY	DECL	FRZ	YR	CONSRV

REVIEW DATE 03/09/2020 BY TWA Total Acres: 40.00 Total Land Value: 58,648 Market: 331,500 Agricultural: 13,648 Common: 45,000 PRINTED 07/30/2025 BY SYS