LOT 4 W OF ROAD
IN OR 2443/400

MOODY GARRETT & ANNA
307 MILLER ST
ST MARYS, GA 31558

2025

21-4N-24-0000-0004-0000

NASSAU COUNTY PROPERTY

BUILDING CHARACTERISTICS

ELEMENT	CD	CONSTRUCTION
Exterior Wall	05	AVERAGE 100
Roof Structur	03	GABLE/HIP 100
Roof Cover	01	MINIMUM 100
Interior Wall	02	WALL BD/WD 100
Interior Floo	09	PINE WOOD 100
Air Condition	03	CENTRAL 100
Heating Type	04	AIR DUCTED 100
Bedrooms		2 100
Bathrooms		1 100
Frame	02	WOOD FRAME 100
Stories	1.	1. 100
Units		0 100
BUD8 Adjustme	04	DIST 01 100
Occupancy	00	NONE 100
Quality	03	Quality Level 03

DOR CODE 0100 SINGLE FAMILY
MAP NUM | MKT AREA 09
NEIGHBORHOOD/LOC 9001.00

AREA TYPE	TOTAL GROSS AREA	PCT OF BASE	YEAR	TOT ADJ AREA	SUBAREA MARKET VALUE
BAS	1,056	100	1993	1,056	77,212
FEP	288	80	1993	230	16,817
TOTALS	1,344			1,286	94,029

MARKET ADJUSTMENTS

TYPE	MDL	EFF. AREA	TOT ADJ PTS	EFF. BASE RATE	REPL. COST NEW	AYB	EYB	ECON	FNCT		NORM	% COND
0100	01	1,286	89.4400	89.44	115,020	1944	1980	0	0	0	18.25	81.75

1 SINGLE FAM – 0% - 0 Heated Area: 1056 HX Base Yr

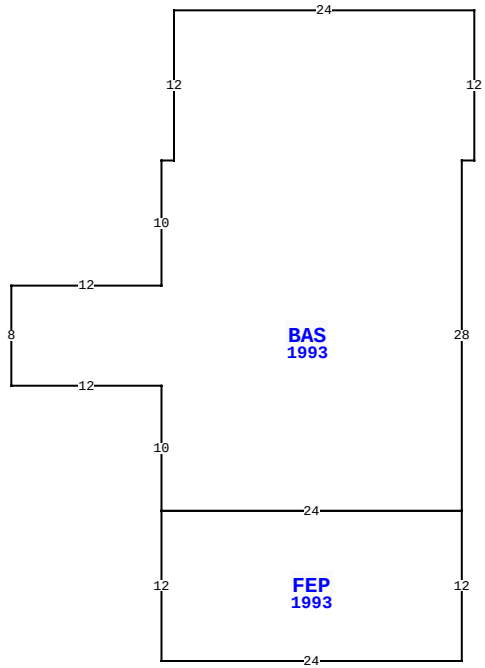

273008 MURRHEE RD, HILLIARD

BLD DATE		LGL DATE	
XF DATE		LAND DATE	05/21/2025 MLU
INC DATE		AG DATE	

VALUATION SUMMARY

VALUATION BY	STANDARD
Tax Group: 4	Tax Dist:
BUILDING MARKET VALUE	94,029
TOTAL MARKET OB/XF VALUE	768
TOTAL LAND VALUE - MARKET	45,000
TOTAL MARKET VALUE	139,797
SOH/AGL Deduction	7,364
ASSESSED VALUE	132,433
TOTAL EXEMPTION VALUE	0
BASE TAXABLE VALUE	132,433
TOTAL JUST VALUE	139,797
NCON VALUE	0
INCOME VALUE	
PREVIOUS YEAR MKT VALUE	120,394

PERMIT NUM	DESCRIPTION	AMT	ISSUED

SALES DATA

OFF RECORD Number	DATE	TYPE INST	Q / U	V / I	RSN CD	SALE PRICE
2443/0400	2/28/2021	WD	U	I	37	15,000
GRANTOR: CONNER EMILY D						
GRANTEE: MOODY GARRETT & ANN						
1466/0480	12/18/2006	WD	Q	I	01	100
GRANTOR: CONNER EMILY D						
GRANTEE: VANZANT MARY K ETAL						

BUILDING NOTES

BUILDING DIMENSIONS

BAS=[YR=1993] W24 S12 W1 S10 W12 S8 E12 S10 FEP=[YR=1993] S12 E24 N12 W24 $ E24 N28 E1 N12 $.

EXTRA FEATURES

LN	OB/XF CODE	DESCRIPTION	BLD	CAP	L	W	UNITS	UT	Adj R	ADJ UNIT PRICE	ORIG COND	YEAR ON	YEAR ACTUAL	Q	% COND	OB/XF MKT VALUE	NOTES
1	0479	VF PICKET	0	0	0	0	120.00	LF	10.00	10.00	100	2005	2005	3	64	768	

LAND DESCRIPTION

TOTAL OB/XF 768

LN	USE CODE	CLS	LAND USE DESCRIPTION	CAP	RD	LOC ZONE	FRONT	DEPTH	TOT LND UTS	UNIT TYPE	DT	DPTH FACT	% COND	TOT ADJ	UNIT PRICE	ADJ UNIT PRICE	LAND VALUE	OTHER ADJUSTMENTS AND NOTES	YEAR	DENSITY	DECL	FRZ	YR	CONSRV
1	000100	C	RES	0	0006	OR	0.00	0.00	1.00	AC		1.00	1.00	1.00	45,000.00	45,000.00	45,000							

REVIEW DATE 05/17/2021 BY TWA Total Acres: 1.00 Total Land Value: 45,000 Market: 0 Agricultural: 0 Common: 45,000 PRINTED 07/30/2025 BY SYS