IN OR 2179/394

SAMSON DAVID H JR & LAVERNE W
1866 1ST AVE
FERNANDINA BEACH, FL 32034

2025

20-3N-29-0000-0026-0000

BUILDING CHARACTERISTICS

ELEMENT	CD	CONSTRUCTION
Exterior Wall	10	ABOVE AVG 60
Exterior Wall	23	REINF CONC 40
Roof Structur	03	GABLE/HIP 100
Roof Cover	03	COMP SHNGL 100
Interior Wall	05	DRYWALL 100
Interior Floo	11	CLAY TILE 70
Interior Floo	14	CARPET 30
Air Condition	03	CENTRAL 100
Heating Type	04	AIR DUCTED 100
Bedrooms		3 100
Bathrooms		4 100
Frame	02	WOOD FRAME 100
Stories	3.	3. 100
Units		0 100
Occupancy	00	NONE 100
Quality	04	Quality Level 04
DOR CODE	0100	SINGLE FAMILY
MAP NUM		MKT AREA 01
NEIGHBORHOOD/LOC	1042.00	

AREA TYPE	TOTAL GROSS AREA	PCT OF BASE	YEAR	TOT ADJ AREA	SUBAREA MARKET VALUE
BAL	42	15	2001	6	822
BAS	1,300	100	2001	1,300	177,978
FGR	1,100	55	2001	605	82,828
FOP	78	30	2001	23	3,149
FOP	200	30	2001	60	8,215
FOP	500	30	2001	150	20,536
FUS	1,300	100	2001	1,300	177,978
STR	20	10	2001	2	274
STR	24	10	2001	2	274
UOP	500	20	2001	100	13,691
TOTALS	5,564			3,648	499,433

MARKET ADJUSTMENTS

TYPE	MDL	EFF. AREA	TOT ADJ PTS	EFF. BASE RATE	REPL. COST NEW	AYB	EYB	ECON	FNCT		NORM	% COND
0900	01	3,648	116.1405	153.31	559,275	2001	2002	0	0	0	10.70	89.30

1 SNGL FAM – 100% - 2010 Heated Area: 2600 HX Base Yr 2010

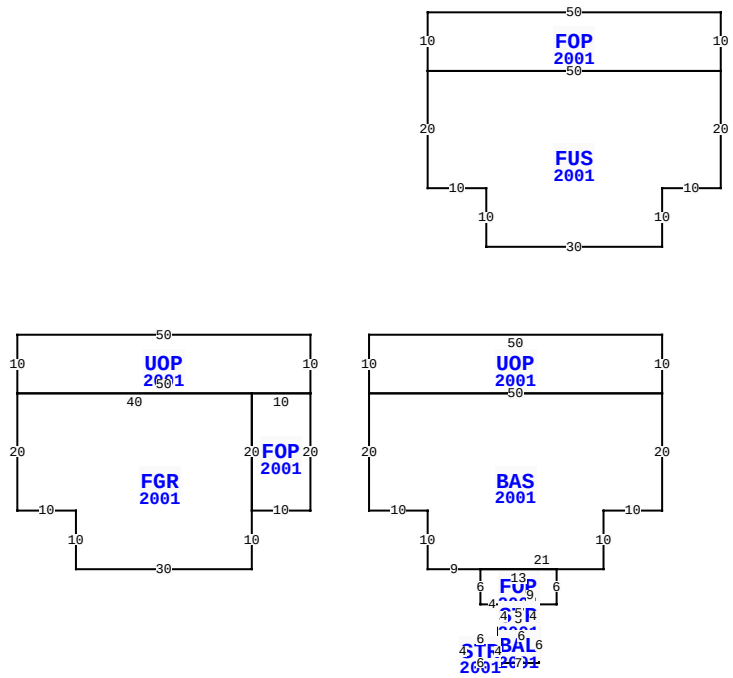

** This building has 11 Sub-Areas

1866 1ST AVE, FERNANDINA BEACH

BLD DATE		LGL DATE	
XF DATE		LAND DATE	05/08/2024 MLU
INC DATE		AG DATE	

NASSAU COUNTY PROPERTY

PAGE 1 of 1 2

VALUATION SUMMARY

VALUATION BY		STANDARD
Tax Group: 2	Tax Dist:	
BUILDING MARKET VALUE		499,433
TOTAL MARKET OB/XF VALUE		16,702
TOTAL LAND VALUE - MARKET		500,000
TOTAL MARKET VALUE		1,016,135
SOH/AGL Deduction		520,238
ASSESSED VALUE		495,897
TOTAL EXEMPTION VALUE	HX HB	50,722
BASE TAXABLE VALUE		445,175
TOTAL JUST VALUE		1,016,135
NCON VALUE		0
INCOME VALUE		
PREVIOUS YEAR MKT VALUE		897,507

PERMIT NUM	DESCRIPTION	AMT	ISSUED
20062723	WIRING FOR ADDITI	1,200	12/11/2006
20062079	ENCLOSE PORCH	12,225	09/11/2006
20052454	WINDOWS FOR PORCH	2,000	08/16/2005
20011015	H/AC	3,000	02/24/2001
20010222	NEW CONSTR	3,000	02/12/2001
2004226	NEW CONSTR	7,000	10/24/2000

SALES DATA

OFF RECORD Number	DATE	TYPE INST	Q U	V I	RSN CD	SALE PRICE
2179/0394	2/15/2018	QC	U	I	11	100
GRANTOR: SAMSON DAVID & LAVERN						
GRANTEE: SAMSON DAVID H JR &						
1648/1139	10/08/2009	WD	Q	I	01	522,500
GRANTOR: MACPHERSON ROBERT I &						
GRANTEE: SAMSON DAVID HENRY						

BUILDING NOTES

BUILDING DIMENSIONS

UOP=[YR=2001] W50 S10 BAS=[YR=2001] S20 E10 S10 E9
FOP=[YR=2001] S6E4 STR=[YR=2001] S4 BAL=[YR=2001] W1S2
STR=[YR=2001] W6S4E6N4$ S4E7N6W6$ E5 N4W5$ E9 N6 W13$ E21 N10
E10 N20 W50$ E50 N10$ PTR=W60 UOP=[YR=2001] W50S10
FGR=[YR=2001] S20E10 S10E30N10 FOP=[YR=2001] E10N20W10S20 $
N20W40$ E50N10$E60$ PTR= N15 FUS=[YR=2001] N10 E10 N20
FOP=[YR=2001] N10W50S10E50$ W50S20E10S10E30$ S15 $.

EXTRA FEATURES

LN	OB/XF CODE	DESCRIPTION	BLD	CAP	L	W	UNITS	UT	Adj R	ADJ UNIT PRICE	ORIG COND	YEAR ON	YEAR ACTUAL	Q	% COND	OB/XF MKT VALUE	NOTES
1	0500	FP-PRE FAB	0	100	0	0	1.00	UT	3,500.00	3,500.00	100	2001	2001	3	84	2,940	
2	0810	CONCRETE A	0	100	0	0	2,680.00	SF	6.50	6.50	100	2001	2001	3	79	13,762	

LAND DESCRIPTION

TOTAL OB/XF 16,702

LN	USE CODE	CLS	LAND USE DESCRIPTION	CAP	RD	LOC ZONE	FRONT	DEPTH	TOT LND UTS	UNIT TYPE	DT	DPTH FACT	% COND	TOT ADJ	UNIT PRICE	ADJ UNIT PRICE	LAND VALUE	OTHER ADJUSTMENTS AND NOTES	YEAR	DENSITY	DECL	FRZ	YR	CONSRV
1	000100	C	RES	100	0006	R-1	100.00	125.00	100.00	FF		1.00	1.00	1.00	5,000.00	5,000.00	500,000							

REVIEW DATE 05/12/2019 BY KBA Total Acres: 0.00 Total Land Value: 500,000 Market: 0 Agricultural: 0 Common: 500,000 PRINTED 07/30/2025 BY SYS