PT OF GOVT LOT 2
IN OR 2676/1553

BINKLEY-CLARK PATRICIA/MCCLAIN GERALDINE LISA
2288 B 1ST AV
FERNANDINA BEACH, FL 32034

2025

20-3N-29-0000-0014-0270

BUILDING CHARACTERISTICS

ELEMENT	CD	CONSTRUCTION
Exterior Wall	16	WD FR STUC 100
Roof Structur	03	GABLE/HIP 100
Roof Cover	03	COMP SHNGL 100
Interior Wall	05	DRYWALL 100
Interior Floo	14	CARPET 70
Interior Floo	11	CLAY TILE 30
Air Condition	03	CENTRAL 100
Heating Type	04	AIR DUCTED 100
Bedrooms		3 100
Bathrooms		2.5 100
Frame	02	WOOD FRAME 100
Stories	2.	2. 100
Units		0 100
Quality	04	Quality Level 04
DOR CODE	0100	SINGLE FAMILY
MAP NUM		MKT AREA 01
NEIGHBORHOOD/LOC	1043.00	

AREA TYPE	TOTAL GROSS AREA	PCT OF BASE	YEAR	TOT ADJ AREA	SUBAREA MARKET VALUE
BAL	210	15	2002	32	4,277
BAL	277	15	2014	42	5,613
BAS	886	100	2002	886	118,401
DCK	28	10	2002	3	401
FGR	434	55	2002	239	31,939
FOP	45	30	2002	14	1,871
FUS	1,122	100	2002	1,122	149,939
PTO	128	5	2002	6	802
TOTALS	3,130			2,344	313,242

MARKET ADJUSTMENTS

TYPE	MDL	EFF. AREA	TOT ADJ PTS	EFF. BASE RATE	REPL. COST NEW	AYB	EYB	ECON	FNCT		NORM	% COND
0320	11	2,344	146.0474	146.05	342,341	2002	2007	0	0	0	8.50	91.50

1 TOWNHOUSE - 100% - 2024 Heated Area: 2008 HX Base Yr 2024

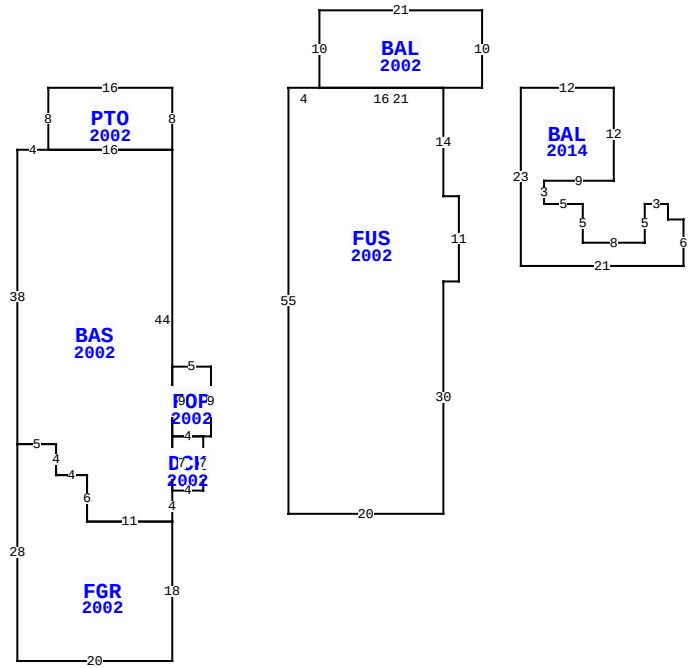

BLD DATE	05/24/2010 DJ	LGL DATE	
XF DATE		LAND DATE	05/08/2025 MLU
INC DATE		AG DATE	

2288-B 1ST AV, FERNANDINA BEACH

NASSAU COUNTY PROPERTY

PAGE 1 of 1 2

VALUATION SUMMARY

VALUATION BY		STANDARD
Tax Group: 2	Tax Dist:	
BUILDING MARKET VALUE		313,242
TOTAL MARKET OB/XF VALUE		3,919
TOTAL LAND VALUE - MARKET		245,160
TOTAL MARKET VALUE		562,321
SOH/AGL Deduction		0
ASSESSED VALUE		562,321
TOTAL EXEMPTION VALUE	HX HB WX	55,722
BASE TAXABLE VALUE		506,599
TOTAL JUST VALUE		562,321
NCON VALUE		0
INCOME VALUE		
PREVIOUS YEAR MKT VALUE		560,648

PERMIT NUM	DESCRIPTION	AMT	ISSUED
20110954	H/AC	1,475	06/13/2011
20110614	REPAIR/RRF	7,500	04/25/2011

SALES DATA

OFF RECORD Number	DATE	TYPE INST	Q U	V I	RSN CD	SALE PRICE
2676/1553	10/31/2023	WD	Q	I	01	725,000
GRANTOR: PETERSON VICKI L						
GRANTEE: BINKLEY-CLARK PATRI						
1655/1667	12/29/2009	WD	U	I	38	245,000
GRANTOR: PREUSSER MICHAEL N TR						
GRANTEE: PETERSON WILLIAM M						

BUILDING NOTES

BUILDING DIMENSIONS

PTO=[YR=2002] W16 S8 BAS=[YR=2002] W4 S38 FGR=[YR=2002] S28 E20 N18 W11 N6 W4 N4 W5$ E5 S4 E4 S6 E11 N4 DCK=[YR=2002] E4 N7 FOP=[YR=2002] E1 N9 W5 S9 E4$ W4 S7$ N44 W16$ E16 N8$PTR=E15 FUS=[YR=2002] E4 BAL=[YR=2002] N10 E21 S10 W21$ E16 S14 E2 S11 W2 S30 W20 N55$ W15 $ PTR=E45 BAL=[YR=2014] E12 S12 W9 S3 E5 S5 E8 N5 E3 S2 E2 S6 W21 N23$ W45$.

EXTRA FEATURES

LN	OB/XF CODE	DESCRIPTION	BLD	CAP	L	W	UNITS	UT	Adj R	ADJ UNIT PRICE	ORIG COND	YEAR ON	YEAR ACTUAL	Q	% COND	OB/XF MKT VALUE	NOTES
1	0811	CONCRETE B	0	100	0	0	796.00	SF	5.20	5.20	100	2002	2002	3	80	3,311	
2	0810	CONCRETE A	0	100	0	0	117.00	SF	6.50	6.50	100	2002	2002	3	80	608	

LAND DESCRIPTION

TOTAL OB/XF 3,919

LN	USE CODE	CLS	LAND USE DESCRIPTION	CAP	RD	LOC ZONE	FRONT	DEPTH	TOT LND UTS	UNIT TYPE	DT	DPTH FACT	% COND	TOT ADJ	UNIT PRICE	ADJ UNIT PRICE	LAND VALUE	OTHER ADJUSTMENTS AND NOTES	YEAR	DENSITY	DECL	FRZ	YR	CONSRV
1	000100	C	RES	100		R-2	40.00	129.00	40.86	FF		1.00	1.00	1.00	6,000.00	6,000.00	245,160							

REVIEW DATE 04/01/2020 BY DJA Total Acres: 0.00 Total Land Value: 245,160 Market: 0 Agricultural: 0 Common: 245,160 PRINTED 07/30/2025 BY SYS