IN OR 2759/193
EX S 27' OF PARCEL 14

JOSEPH CHRISTINE
3635 STOKES AVE
CHARLOTTE, NC 28210

2025

20-3N-29-0000-0014-0190

BUILDING CHARACTERISTICS

ELEMENT	CD	CONSTRUCTION
Exterior Wall	16	WD FR STUC 100
Roof Structur	03	GABLE/HIP 100
Roof Cover	03	COMP SHNGL 100
Interior Wall	05	DRYWALL 100
Interior Floo	14	CARPET 70
Interior Floo	11	CLAY TILE 30
Air Condition	03	CENTRAL 100
Heating Type	04	AIR DUCTED 100
Bedrooms		3 100
Bathrooms		2.5 100
Frame	02	WOOD FRAME 100
Stories	2.	2. 100
Units		0 100
Quality	03	Quality Level 03

DOR CODE 0100 SINGLE FAMILY
MAP NUM | MKT AREA 01
NEIGHBORHOOD/LOC 1043.00

AREA TYPE	TOTAL GROSS AREA	PCT OF BASE	YEAR	TOT ADJ AREA	SUBAREA MARKET VALUE
BAL	210	15	2002	32	4,037
BAS	760	100	2002	760	95,887
DCK	28	10	2002	3	378
FGR	440	55	2002	242	30,532
FOP	45	30	2002	14	1,767
FUS	1,122	100	2002	1,122	141,559
PTO	128	5	2002	6	757
TOTALS	2,733			2,179	274,917

MARKET ADJUSTMENTS

TYPE	MDL	EFF. AREA	TOT ADJ PTS	EFF. BASE RATE	REPL. COST NEW	AYB	EYB	ECON	FNCT		NORM	% COND
0320	11	2,179	141.7599	141.76	308,895	2002	2002	0	0	0	11.00	89.00

1 TOWNHOUSE - 0% - 2025 Heated Area: 1882 HX Base Yr

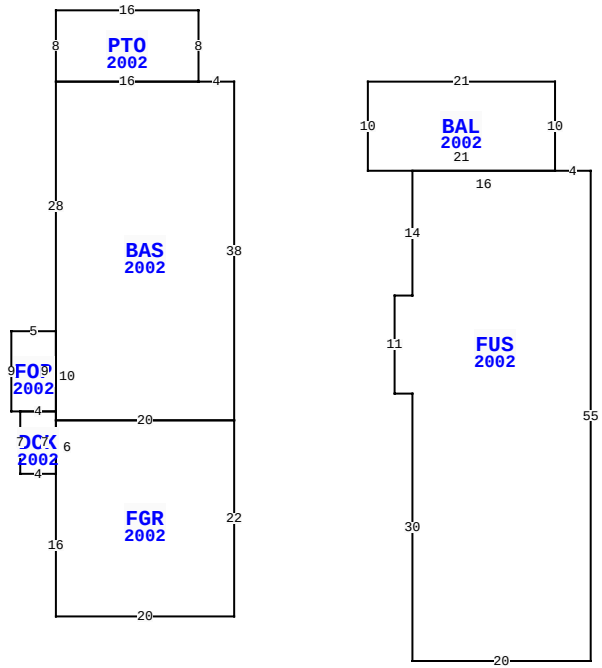

2288 1ST AVE, FERNANDINA BEACH

BLD DATE	05/24/2010 DJ	LGL DATE	
XF DATE		LAND DATE	05/08/2025 MLU
INC DATE		AG DATE	

NASSAU COUNTY PROPERTY

PAGE 1 of 1 2

VALUATION SUMMARY

VALUATION BY	STANDARD
Tax Group: 2	Tax Dist:
BUILDING MARKET VALUE	274,917
TOTAL MARKET OB/XF VALUE	4,180
TOTAL LAND VALUE - MARKET	243,480
TOTAL MARKET VALUE	522,577
SOH/AGL Deduction	0
ASSESSED VALUE	522,577
TOTAL EXEMPTION VALUE	0
BASE TAXABLE VALUE	522,577
TOTAL JUST VALUE	522,577
NCON VALUE	0
INCOME VALUE	
PREVIOUS YEAR MKT VALUE	522,572

PERMIT NUM	DESCRIPTION	AMT	ISSUED
20100575	H/AC	3,500	04/08/2010
B0112360	NEW CONSTR	245,000	10/26/2001

SALES DATA

OFF RECORD Number	DATE	TYPE INST	Q / U	V / I	RSN CD	SALE PRICE
2759/193	12/27/2024	WD	Q	I	01	637,000
GRANTOR: BRAMLEY REVOCABLE LIV						
GRANTEE: JOSEPH CHRISTINE						
1740/1005	5/17/2011	WD	U	I	30	100
GRANTOR: BRAMLEY WAYNE M & MAR						
GRANTEE: BRAMLEY WAYNE MELVI						

BUILDING NOTES

BUILDING DIMENSIONS

BAS=[YR=2002] W4 PTO=[YR=2002] N8W16S8E16 $ W16 S28 FOP=[YR=2002] W5S9E1 DCK=[YR=2002] S7E4 FGR=[YR=2002] S16E20 N22 W20 S6$ N7 W4 $ E4 N9$ S10 E20 N38$ PTR=E15 BAL=[YR=2002] E21 S10 FUS=[YR=2002] E4 S55 W20 N30 W2 N11 E2 N14 E16$ W21 N10$ W15$.

EXTRA FEATURES

LN	OB/XF CODE	DESCRIPTION	BLD	CAP	L	W	UNITS	UT	Adj R	ADJ UNIT PRICE	ORIG COND	YEAR ON	YEAR ACTUAL	Q	% COND	OB/XF MKT VALUE	NOTES
1	0811	CONCRETE B	0	0	0	0	886.00	SF	5.20	5.20	100	2002	2002	3	80	3,686	
2	0810	CONCRETE A	0	0	0	0	95.00	SF	6.50	6.50	100	2002	2002	3	80	494	

LAND DESCRIPTION

TOTAL OB/XF 4,180

LN	USE CODE	CLS	LAND USE DESCRIPTION	CAP	RD	LOC ZONE	FRONT	DEPTH	TOT LND UTS	UNIT TYPE	DT	DPTH FACT	% COND	TOT ADJ	UNIT PRICE	ADJ UNIT PRICE	LAND VALUE	OTHER ADJUSTMENTS AND NOTES	YEAR	DENSITY	DECL	FRZ	YR	CONSRV
1	000100	C	RES	0		R-2	40.00	129.00	40.58	FF		1.00	1.00	1.00	6,000.00	6,000.00	243,480							

REVIEW DATE 08/26/2019 BY DJA Total Acres: 0.00 Total Land Value: 243,480 Market: 0 Agricultural: 0 Common: 243,480 PRINTED 07/30/2025 BY SYS