LOT 9
HILL FARMS OR 2540/136

WALKER WESLEY MARVIN & CIERRA
15550 CR 108
HILLIARD, FL 32046

2025

20-3N-24-2600-0009-0000

BUILDING CHARACTERISTICS

ELEMENT	CD	CONSTRUCTION
Exterior Wall	30	VINYL 100
Roof Structur	03	GABLE/HIP 100
Roof Cover	03	COMP SHNGL 80
Roof Cover	12	MODULAR MT 20
Interior Wall	05	DRYWALL 100
Interior Floo	13	LVT/LAMNT 70
Interior Floo	14	CARPET 30
Air Condition	03	CENTRAL 100
Heating Type	04	AIR DUCTED 100
Bedrooms		5 100
Bathrooms		4 100
Frame	02	WOOD FRAME 100
Stories	2.	2. 100
Units		0 100
Quality	01	Quality Level 01
DOR CODE	0100	SINGLE FAMILY
MAP NUM		MKT AREA 09
NEIGHBORHOOD/LOC	9001.00	

AREA TYPE	TOTAL GROSS AREA	PCT OF BASE	YEAR	TOT ADJ AREA	SUBAREA MARKET VALUE
BAS	2,424	100	2025	2,424	313,035
FGR	872	55	2025	480	61,987
FOP	506	30	2025	152	19,629
FOP	706	30	2025	212	27,378
FUS	1,681	100	2025	1,681	217,084
TOTALS	6,189			4,949	639,114

MARKET ADJUSTMENTS

TYPE	MDL	EFF. AREA	TOT ADJ PTS	EFF. BASE RATE	REPL. COST NEW	AYB	EYB	ECON	FNCT		NORM	% COND
0500	01	4,949	81.7344	129.14	639,114	2024	2024	0	0	0	0.00	100.00

1 SFR CUST – 100% - 2025 Heated Area: 4105 HX Base Yr 2025

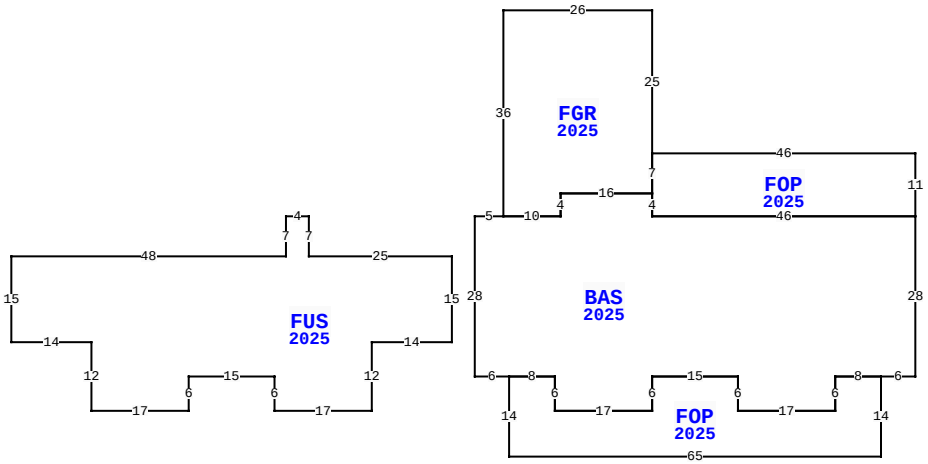

15550 CR 108, HILLIARD

BLD DATE		LGL DATE	
XF DATE		LAND DATE	05/09/2025 MLU
INC DATE		AG DATE	

NASSAU COUNTY PROPERTY

PAGE 1 of 1 4

VALUATION SUMMARY

VALUATION BY		STANDARD
Tax Group: 4	Tax Dist:	
BUILDING MARKET VALUE		639,114
TOTAL MARKET OB/XF VALUE		0
TOTAL LAND VALUE - MARKET		81,000
TOTAL MARKET VALUE		720,114
SOH/AGL Deduction		0
ASSESSED VALUE		720,114
TOTAL EXEMPTION VALUE	HX HB	50,722
BASE TAXABLE VALUE		669,392
TOTAL JUST VALUE		720,114
NCON VALUE		639,114
INCOME VALUE		
PREVIOUS YEAR MKT VALUE		67,500

PERMIT NUM	DESCRIPTION	AMT	ISSUED
CO240002760	PRIVATE PROVIDER	783,718	03/08/2024
230008309	NEW SFR	783,718	06/28/2023

SALES DATA

OFF RECORD Number	DATE	TYPE INST	Q U /	V I /	RSN CD	SALE PRICE
2606/0516	12/05/2022	WD	Q	V	01	65,000

GRANTOR: G&H LAND & TIMBER INV

GRANTEE: WALKER WESLEY MARVI

BUILDING NOTES

BUILDING DIMENSIONS

BAS=[YR=2025;ORIG=188,19] W46 N4 W16 S4 W10 W5 S28 E6 E8 S6 E17 N6 E15 S6 E17 N6 E8 E6 N28 $
FGR=[YR=2025;ORIG=116,-17] E26 S25 S7 W16 S4 W10 N36 $
FOP=[YR=2025;ORIG=142,19] E46 N11 W46 S7 S4 $
FOP=[YR=2025;ORIG=117,61] E65 N14 W8 S6 W17 N6 W15 S6 W17 N6 W8 S14 $
FUS=[YR=2025;ORIG=82,19] W4 S7 W48 S15 E14 S12 E17 N6 E15 S6 E17 N12 E14 N15 W25 N7 $
.

EXTRA FEATURES

LN	OB/XF CODE	DESCRIPTION	BLD	CAP	L	W	UNITS	UT	Adj R	ADJ UNIT PRICE	ORIG COND	YEAR ON	YEAR ACTUAL	Q	% COND	OB/XF MKT VALUE	NOTES

LAND DESCRIPTION

TOTAL OB/XF 0

LN	USE CODE	CLS	LAND USE DESCRIPTION	CAP	RD	LOC ZONE	FRONT	DEPTH	TOT LND UTS	UNIT TYPE	DT	DPTH FACT	% COND	TOT ADJ	UNIT PRICE	ADJ UNIT PRICE	LAND VALUE	OTHER ADJUSTMENTS AND NOTES	YEAR	DENSITY	DECL	FRZ	YR	CONSRV
1	000100	C	RES	100			0.00	0.00	3.00	AC		1.00	1.00	0.90	30,000.00	27,000.00	81,000							

REVIEW DATE 04/29/2024 BY WW Total Acres: 3.00 Total Land Value: 81,000 Market: 0 Agricultural: 0 Common: 81,000 PRINTED 07/30/2025 BY SYS