PT OR 1953/879
ESMT IN OR 1193/1093
RETIREMENT TRACT FOR

AGI ACQUISITIONS LLC
222 ROBERT ROSE DR
MURFREESBORO, TN 37129

2025

20-2N-28-0000-0001-0110

BUILDING CHARACTERISTICS

ELEMENT	CD	CONSTRUCTION
Exterior Wall	23	REINF CONC 100
Roof Structur	08	IRREGULAR 100
Roof Cover	03	COMP SHNGL 100
Interior Wall	05	DRYWALL 70
Interior Wall	08	DECORATIVE 30
Interior Floo	14	CARPET 70
Interior Floo	08	SHT VINYL 30
Ceiling	01	FIN.SUSPD 100
Air Condition	06	ENG CENTRL 100
Heating Type	09	ENG F AIR 100
Fixtures		199 100
Frame	04	REIN CONC 100
Story Height		10 100
RMS		88 100
Stories	1.	1. 100
Units		0 100
Occupancy	00	NONE 100
Quality	05	Quality Level 05
DOR CODE	0600	RETIREMENT HOMES
MAP NUM		MKT AREA 03
NEIGHBORHOOD/LOC	3039.00	

AREA TYPE	TOTAL GROSS AREA	PCT OF BASE	YEAR	TOT ADJ AREA	SUBAREA MARKET VALUE
BAS	1,406	100	2026	1,406	67,931
BAS	4,654	100	2026	4,654	224,858
BAS	4,962	100	2026	4,962	239,739
BAS	4,962	100	2026	4,962	239,739
BAS	13,641	100	2026	13,641	659,065
FCP	992	30	2026	298	14,398
FEP	104	80	2026	83	4,010
FOP	144	30	2026	43	2,078
FOP	380	30	2026	114	5,508
FST	180	50	2026	90	4,349
TOTALS	32,183			31,201	1,507,476

MARKET ADJUSTMENTS

TYPE	MDL	EFF. AREA	TOT ADJ PTS	EFF. BASE RATE	REPL. COST NEW	AYB	EYB	ECON	FNCT		NORM	% COND
7403	04	31,201	130.9347	161.05	5,024,921	1998	1998	35	0	0	35.00	30.00

1 ASSIST LIV – 0% - 2025 Heated Area: 30466 HX Base Yr

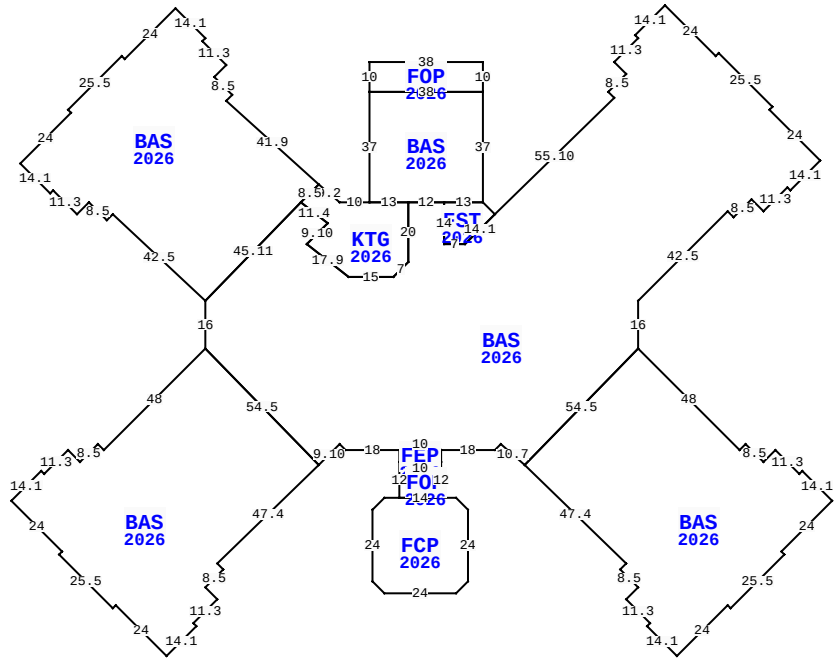

** This building has 11 Sub-Areas

74 OSPREY VILLAGE DR, FERNANDINA BEACH

BLD DATE	05/16/2025	KW	LGL DATE		
XF DATE	08/10/2020	KK	LAND DATE	05/12/2025	DC
INC DATE			AG DATE		

NASSAU COUNTY PROPERTY

PAGE 1 of 4 8

VALUATION SUMMARY

VALUATION BY	STANDARD
Tax Group: 8	Tax Dist:
BUILDING MARKET VALUE	13,383,102
TOTAL MARKET OB/XF VALUE	617,169
TOTAL LAND VALUE - MARKET	1,034,000
TOTAL MARKET VALUE	15,034,271
SOH/AGL Deduction	0
ASSESSED VALUE	15,034,271
TOTAL EXEMPTION VALUE	0
BASE TAXABLE VALUE	15,034,271
TOTAL JUST VALUE	15,034,271
NCON VALUE	2,795,957
INCOME VALUE	
PREVIOUS YEAR MKT VALUE	10,362,869

OSPREY VILLAGE ASSISTED LIVING FACILITY

PERMIT NUM	DESCRIPTION	AMT	ISSUED
22010266	ROOF-76 OSPREY VI	150,000	07/05/2022
20001850	REPAIR/RRF	99,553	03/12/2020
E1326297	ELEC OTHER	68,433	06/01/2013
B21813	NEW CONSTR	0	09/16/2008
C21813	CO ISSUED	0	09/16/2008
B19990	NEW CONSTR	11,675,000	08/01/2008

SALES DATA

OFF RECORD Number	DATE	TYPE INST	Q / U	V / I	RSN CD	SALE PRICE
1953/0879	12/17/2014	SW	U	I	35	64,040,000
GRANTOR: HEALTH CARE REIT INC						
GRANTEE: AGI ACQUISITIONS LL						
1372/1784	12/09/2005	WD	U	I	19	13,897,900
GRANTOR: FORMATION PROPERTIES						
GRANTEE: HEALTH CARE REIT IN						

BUILDING NOTES

EXTRA FEATURES

LN	OB/XF CODE	DESCRIPTION	BLD	CAP	L	W	UNITS	UT	Adj R	ADJ UNIT PRICE	ORIG COND	YEAR ON	YEAR ACTUAL	Q	% COND	OB/XF MKT VALUE	NOTES
1	0803	ASPHALT C	0	0	0	0	33,798.00	SF	2.00	2.00	100	1998	1998	3	50	33,798	
2	0400	CONC CURB	0	0	0	0	573.00	LF	15.00	15.00	100	1998	1998	3	80	6,876	
3	0810	CONCRETE A	0	0	0	0	3,490.00	SF	6.50	6.50	100	1998	1998	3	73	16,560	
4	0972	ST LGHT UN	0	0	0	0	13.00	UT	2,530.00	2,530.00	100	1998	1998	3	42	13,814	
5	0402	CONC BUMPE	0	0	0	0	19.00	UT	25.00	25.00	100	1998	1998	3	80	380	
6	0463	FENCE GATE	0	0	0	0	2.00	UT	450.00	450.00	100	1998	1998	3	42	378	
7	0505	FLAGPOLE A	0	0	0	0	18.00	LF	50.00	50.00	100	1998	1998	3	20	180	
8	0446	BOX FNC 6'	0	0	0	0	71.00	LF	20.00	20.00	100	1998	1998	3	20	284	
9	0825	BRICK	0	0	0	0	18.00	SF	12.50	12.50	100	1998	1998	3	92	207	
10	0810	CONCRETE A	0	0	14	8	112.00	SF	6.50	6.50	100	1998	1998	3	73	531	

TOTAL OB/XF 73,008

BUILDING DIMENSIONS

BAS=[YR=2026;ORIG=92,31] U39R40 U2L2 U6R6 U4L4 U8R8 U1L1 U10R10 D17R17 U1R1 D18R18 D1L1 D17R17 D10L10 U1L1 D8L8 U4L4 D6L6 U2L2 D30L30 S16 D39L38 U7L8 D2L2 W18 U2L2 W10 D2L2 W18 U2L2 D7L7 U39L38 N16 U33R32 D7R9 D7L7 D11R14 E15 U5R5 N20 E12 S14 E7 U10R10 $
BAS=[YR=2026;ORIG=-5,76] D34L34 U2L2 D6L6 U4L4 D8L8 U1L1 D10L10 D17R17 D1L1 D18R18 U1R1 D17R17 U10R10 U1L1 U8R8 U4L4 U6R6 U2L2 U33R34 U39L38 $
BAS=[YR=2026;ORIG=140,76] D34R34 U2R2 D6R6 U4R4 D8R8 U1R1 D10R10 D17L17 D1R1 D18L18 U1L1 D17L17 U10L10 U1R1 U8L8 U4R4 U6L6 U2R2 U33L34 U39R38 $
BAS=[YR=2026;ORIG=-5,60] U29L31 D2L2 U6L6 D4L4 U8L8 D1L1

LAND DESCRIPTION

LN	USE CODE	CLS	LAND USE DESCRIPTION	CAP	RD	LOC ZONE	FRONT	DEPTH	TOT LND UTS	UNIT TYPE	DT	DPTH FACT	% COND	TOT ADJ	UNIT PRICE	ADJ UNIT PRICE	LAND VALUE	OTHER ADJUSTMENTS AND NOTES	YEAR	DENSITY	DECL	FRZ	YR	CONSRV
1	000600	C	RETIREMENT	0	0006	PUD	0.00	0.00	5.17	AC		1.00	1.00	1.00	200,000.00	200,000.00	1,034,000							

REVIEW DATE 01/08/2025 BY KW Total Acres: 5.17 Total Land Value: 1,034,000 Market: 0 Agricultural: 0 Common: 1,034,000 PRINTED 07/30/2025 BY SYS

PT OR 1953/879
ESMT IN OR 1193/1093
RETIREMENT TRACT FOR

AGI ACQUISITIONS LLC
222 ROBERT ROSE DR
MURFREESBORO, TN 37129

2025

20-2N-28-0000-0001-0110

BUILDING CHARACTERISTICS

ELEMENT	CD	CONSTRUCTION
Exterior Wall	17	CB STUCCO 100
Roof Structur	04	WOOD TRUSS 100
Roof Cover	03	COMP SHNGL 100
Interior Wall	01	MINIMUM 100
Interior Floo	03	CONC FINSH 100
Ceiling	02	F.NOT SUS 100
Air Condition	01	NONE 100
Heating Type	01	NONE 100
Fixtures		2 100
Frame	03	MASONRY 100
Story Height		10 100
RMS		4 100
Stories	1.	1. 100
Units		0 100
Occupancy	00	NONE 100
Quality	03	Quality Level 03
DOR CODE	0600	RETIREMENT HOMES
MAP NUM		MKT AREA 03
NEIGHBORHOOD/LOC	3039.00	

AREA TYPE	TOTAL GROSS AREA	PCT OF BASE	YEAR	TOT ADJ AREA	SUBAREA MARKET VALUE
AOF	351	100	1998	351	13,588
BAS	675	100	1998	675	26,130
PTO	24	5	1998	1	39
TOTALS	1,050			1,027	39,757

MARKET ADJUSTMENTS

TYPE	MDL	EFF. AREA	TOT ADJ PTS	EFF. BASE RATE	REPL. COST NEW	AYB	EYB	ECON	FNCT		NORM	% COND
2501	04	1,027	61.8450	53.03	54,462	1998	1998	0	0	0	27.00	73.00

2 SERV SHOP – 0% - 2025 Heated Area: 1026 HX Base Yr

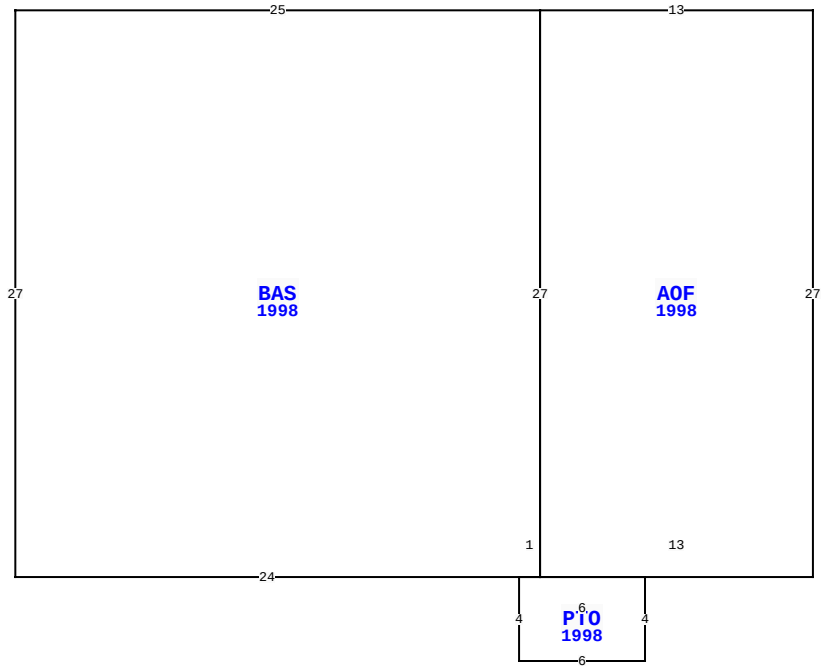

BLD DATE	05/16/2025	KW	LGL DATE
XF DATE	08/10/2020	KK	LAND DATE 05/12/2025 DC
INC DATE			AG DATE

74 OSPREY VILLAGE DR, FERNANDINA BEACH

NASSAU COUNTY PROPERTY

PAGE 2 of 4 8

VALUATION SUMMARY

VALUATION BY	STANDARD
Tax Group: 8	Tax Dist:
BUILDING MARKET VALUE	13,383,102
TOTAL MARKET OB/XF VALUE	617,169
TOTAL LAND VALUE - MARKET	1,034,000
TOTAL MARKET VALUE	15,034,271
SOH/AGL Deduction	0
ASSESSED VALUE	15,034,271
TOTAL EXEMPTION VALUE	0
BASE TAXABLE VALUE	15,034,271
TOTAL JUST VALUE	15,034,271
NCON VALUE	2,795,957
INCOME VALUE	
PREVIOUS YEAR MKT VALUE	10,362,869

PERMIT NUM	DESCRIPTION	AMT	ISSUED
E21084	ELEC OTHER	200	07/01/2008
B21430	TEMPORARY CO	0	05/01/2008
B21431	TEMPORARY CO	0	05/01/2008
B9704376	NEW CONSTR	100,000	10/01/1997
B9703890	NEW CONSTR	2,379,000	05/01/1997

SALES DATA

OFF RECORD Number	DATE	TYPE INST	Q U	V I	RSN CD	SALE PRICE
1953/0879	12/17/2014	SW	U	I	35	64,040,000
GRANTOR: HEALTH CARE REIT INC						
GRANTEE: AGI ACQUISITIONS LL						
1372/1784	12/09/2005	WD	U	I	19	13,897,900
GRANTOR: FORMATION PROPERTIES						
GRANTEE: HEALTH CARE REIT IN						

BUILDING NOTES

BUILDING DIMENSIONS

AOF=[YR=1998] W13 BAS=[YR=1998] W25 S27 E24 PTO=[YR=1998] S4 E6 N4 W6$ E1 N27 $ S27 E13 N27 $.

EXTRA FEATURES

LN	OB/XF CODE	DESCRIPTION	BLD	CAP	L	W	UNITS	UT	Adj R	ADJ UNIT PRICE	ORIG COND	YEAR ON	YEAR ACTUAL	Q	% COND	OB/XF MKT VALUE	NOTES
11	0810	CONCRETE A	0	0	12	10	120.00	SF	6.50	6.50	100	1998	1998	3	73	569	
12	0504	FP-ELECTRI	0	0	0	0	2.00	UT	2,000.00	2,000.00	100	1998	1998	3	80	3,200	
13	0383	FREEZER	0	0	7	7	49.00	SF	105.00	105.00	100	1998	1998	3	40	2,058	
14	0381	COOLER	0	0	6	7	42.00	SF	82.50	82.50	100	1998	1998	3	40	1,386	
15	0965	SPRNK FIRE	0	0	0	0	466.00	UT	240.00	240.00	100	1998	1998	3	73	81,643	
16	0505	FLAGPOLE A	0	0	0	0	18.00	LF	50.00	50.00	100	1998	1998	3	20	180	
17	0810	CONCRETE A	0	0	0	0	34.00	SF	6.50	6.50	100	1998	1998	3	73	161	
18	0810	CONCRETE A	0	0	9	4	36.00	SF	6.50	6.50	100	1998	1998	3	73	171	
19	0810	CONCRETE A	0	0	0	0	309.00	SF	6.50	6.50	100	1998	1998	3	73	1,466	
20	0803	ASPHALT C	0	0	0	0	28,687.00	SF	2.00	2.00	100	2008	2008	3	60	34,424	

LAND DESCRIPTION

TOTAL OB/XF 125,258

LN	USE CODE	CLS	LAND USE DESCRIPTION	CAP	RD	LOC ZONE	FRONT	DEPTH	TOT LND UTS	UNIT TYPE	DT	DPTH FACT	% COND	TOT ADJ	UNIT PRICE	ADJ UNIT PRICE	LAND VALUE	OTHER ADJUSTMENTS AND NOTES	YEAR	DENSITY	DECL	FRZ	YR	CONSRV

REVIEW DATE 01/08/2025 BY KW Total Acres: 5.17 Total Land Value: 1,034,000 Market: 0 Agricultural: 0 Common: 1,034,000 PRINTED 07/30/2025 BY SYS

PT OR 1953/879
ESMT IN OR 1193/1093
RETIREMENT TRACT FOR

AGI ACQUISITIONS LLC
222 ROBERT ROSE DR
MURFREESBORO, TN 37129

2025

20-2N-28-0000-0001-0110

NASSAU COUNTY PROPERTY

BUILDING CHARACTERISTICS

ELEMENT	CD	CONSTRUCTION
Exterior Wall	23	REINF CONC 100
Roof Structur	10	STEEL FRME 100
Roof Cover	03	COMP SHNGL 50
Roof Cover	04	BUILT-UP 50
Interior Wall	05	DRYWALL 70
Interior Wall	08	DECORATIVE 30
Interior Floo	14	CARPET 70
Interior Floo	11	CLAY TILE 30
Ceiling	02	F.NOT SUS 100
Air Condition	04	ROOF TOP 100
Heating Type	04	AIR DUCTED 100
Fixtures		355 100
Frame	04	REIN CONC 100
Story Height		11 100
RMS		225 100
Stories	4.	4. 100
Units		0 100
Occupancy	00	NONE 100
Quality	04	Quality Level 04
DOR CODE	0600	RETIREMENT HOMES
MAP NUM		MKT AREA 03
NEIGHBORHOOD/LOC	3039.00	

AREA TYPE	TOTAL GROSS AREA	PCT OF BASE	YEAR	TOT ADJ AREA	SUBAREA MARKET VALUE
BAL	68	15	2025	10	1,395
BAS	619	100	2025	619	86,371
BAS	789	100	2025	789	110,092
BRA	988	110	2025	1,087	151,672
FCP	826	30	2025	248	34,604
FEP	143	80	2025	114	15,907
FGR	7,450	60	2025	4,470	623,711
FGR	8,534	60	2025	5,120	714,408
FGR	8,534	60	2025	5,120	714,408
FOP	72	30	2025	22	3,069
TOTALS	95,690			84,825	11,835,869

MARKET ADJUSTMENTS

TYPE	MDL	EFF. AREA	TOT ADJ PTS	EFF. BASE RATE	REPL. COST NEW	AYB	EYB	ECON	FNCT		NORM	% COND
7402	04	84,825	124.9402	218.02	18,493,546	2008	2008	20	0	0	16.00	64.00

3 INDEPEN LIV – 0% - 2025 Heated Area: 67018 HX Base Yr

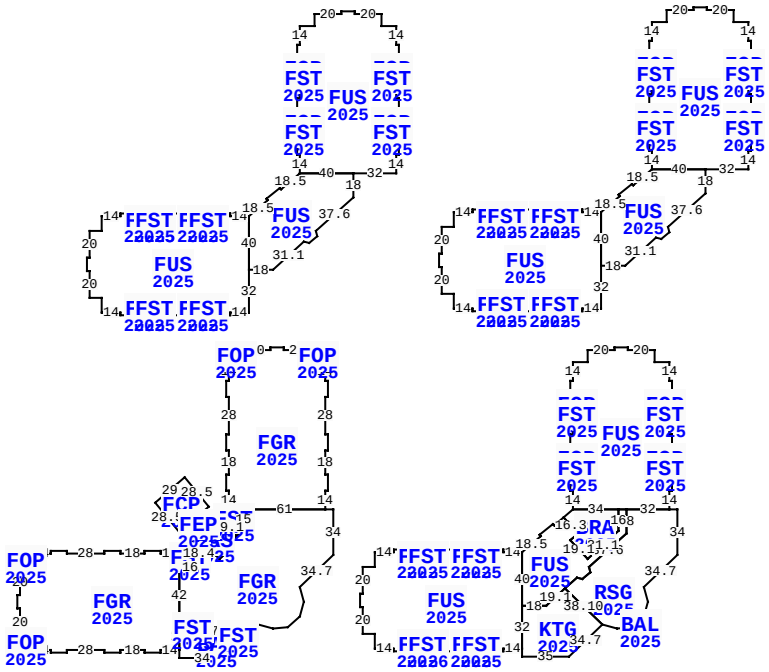

** This building has 77 Sub-Areas

74 OSPREY VILLAGE DR, FERNANDINA BEACH

BLD DATE	05/16/2025	KW	LGL DATE		
XF DATE	08/10/2020	KK	LAND DATE	05/12/2025	DC
INC DATE			AG DATE		

VALUATION SUMMARY

VALUATION BY	STANDARD
Tax Group: 8	Tax Dist:
BUILDING MARKET VALUE	13,383,102
TOTAL MARKET OB/XF VALUE	617,169
TOTAL LAND VALUE - MARKET	1,034,000
TOTAL MARKET VALUE	15,034,271
SOH/AGL Deduction	0
ASSESSED VALUE	15,034,271
TOTAL EXEMPTION VALUE	0
BASE TAXABLE VALUE	15,034,271
TOTAL JUST VALUE	15,034,271
NCON VALUE	2,795,957
INCOME VALUE	
PREVIOUS YEAR MKT VALUE	10,362,869

PERMIT NUM	DESCRIPTION	AMT	ISSUED

SALES DATA

OFF RECORD Number	DATE	TYPE INST	Q / U	V / I	RSN CD	SALE PRICE
1953/0879	12/17/2014	SW	U	I	35	64,040,000
GRANTOR: HEALTH CARE REIT INC						
GRANTEE: AGI ACQUISITIONS LL						
1372/1784	12/09/2005	WD	U	I	19	13,897,900
GRANTOR: FORMATION PROPERTIES						
GRANTEE: HEALTH CARE REIT IN						

BUILDING NOTES

BUILDING DIMENSIONS

FGR=[YR=2025;LABEL=1ST FLR;ORIG=133,100] E11 N9 E20 N2 E10 S2 E20 S9 E11 S14 E2 S12 W2 S28 E2 S12 W2 S18 E2 S12 W2 S14 W61 W11 N14 W2 N12 E2 N18 W2 N12 E2 N28 W2 N12 E2 N14 $
FGR=[YR=2025;LABEL=1ST FLR;ORIG=-23,254] E9 N11 E14 N2 E12 S2 E28 N2 E12 S2 E18 N2 E12 S2 E14 S10 S42 S20 W14 S2 W12 N2 W18 S2 W12 N2 W28 S2 W12 N2 W14 N11 W9 N20 W2 N10 E2 N20 $
FUS=[YR=2025;LABEL=3RD FLR;ORIG=186,-151] E11 N9 E20 N2 E10 S2 E20 S9 E11 S14 E2 S12 W2 W6 S12 S3 E6 S13 E2 S12 W2 W6 S12 S3 E6 S3 E2 S12 W2 S14 W32 W40 N14 W2 N12 E2 N3 E6 N3 N12 W6 W2 N12 E2 N13 E6 N3 N12 W6 W2 N12 E2 N14 $
FUS=[YR=2025;LABEL=3RD FLR;ORIG=29,2] E9 N11 E14 N2 E12 S2 S6 E12 E3 N6 E13 N2 E12 S2 S6 E12 E3 N6 E3 N2 E12 S2 E14 S40 S32

EXTRA FEATURES

LN	OB/XF CODE	DESCRIPTION	BLD	CAP	L	W	UNITS	UT	Adj R	ADJ UNIT PRICE	ORIG COND	YEAR ON	YEAR ACTUAL	Q	% COND	OB/XF MKT VALUE	NOTES
21	0972	ST LGHT UN	0	0	0	0	5.00	UT	2,530.00	2,530.00	100	2008	2008	3	72	9,108	
22	0810	CONCRETE A	0	0	0	0	429.00	SF	6.50	6.50	100	2008	2008	3	88	2,454	
23	0819	CONC 12"	0	0	0	0	138.00	SF	9.50	9.50	100	2008	2008	3	88	1,154	
24	0966	FIRE SPRNK	0	0	0	0	76,910.00	SF	3.00	3.00	100	2008	2008	3	88	203,042	
25	0410	ELEVATOR	0	0	0	0	2.00	UT	70,000.00	70,000.00	100	2008	2008	3	100	140,000	
26	0411	F ELEVATOR	0	0	0	0	1.00	UT	30,000.00	30,000.00	100	2008	2008	3	100	30,000	
27	0500	FP-PRE FAB	0	0	0	0	1.00	UT	3,500.00	3,500.00	100	2008	2008	3	91	3,185	
28	0402	CONC BUMPE	0	0	0	0	74.00	UT	25.00	25.00	100	2008	2008	3	91	1,684	
29	4950	BOLLARD	0	0	0	0	6.00	UT	100.00	100.00	100	2008	2008	3	100	600	
30	0400	CONC CURB	0	0	0	0	846.00	LF	15.00	15.00	100	2008	2008	3	91	11,548	

TOTAL OB/XF 402,775

LAND DESCRIPTION

LN	USE CODE	CLS	LAND USE DESCRIPTION	CAP	RD	LOC ZONE	FRONT	DEPTH	TOT LND UTS	UNIT TYPE	DT	DPTH FACT	% COND	TOT ADJ	UNIT PRICE	ADJ UNIT PRICE	LAND VALUE	OTHER ADJUSTMENTS AND NOTES	YEAR	DENSITY	DECL	FRZ	YR	CONSRV

REVIEW DATE 01/08/2025 BY KW Total Acres: 5.17 Total Land Value: 1,034,000 Market: 0 Agricultural: 0 Common: 1,034,000 PRINTED 07/30/2025 BY SYS

PT OR 1953/879
ESMT IN OR 1193/1093
RETIREMENT TRACT FOR

AGI ACQUISITIONS LLC
222 ROBERT ROSE DR
MURFREESBORO, TN 37129

2025

20-2N-28-0000-0001-0110

NASSAU COUNTY PROPERTY

BUILDING CHARACTERISTICS

ELEMENT	CD	CONSTRUCTION

DOR CODE	0600	RETIREMENT HOMES	
MAP NUM		MKT AREA	03
NEIGHBORHOOD/LOC	3039.00		

AREA TYPE	TOTAL GROSS AREA	PCT OF BASE	YEAR	TOT ADJ AREA	SUBAREA MARKET VALUE
TOTALS					

MARKET ADJUSTMENTS

TYPE	MDL	EFF. AREA	TOT ADJ PTS	EFF. BASE RATE	REPL. COST NEW	AYB	EYB	ECON	FNCT		NORM	% COND

VALUATION SUMMARY

VALUATION BY	STANDARD
Tax Group: 8	Tax Dist:
BUILDING MARKET VALUE	13,383,102
TOTAL MARKET OB/XF VALUE	617,169
TOTAL LAND VALUE - MARKET	1,034,000
TOTAL MARKET VALUE	15,034,271
SOH/AGL Deduction	0
ASSESSED VALUE	15,034,271
TOTAL EXEMPTION VALUE	0
BASE TAXABLE VALUE	15,034,271
TOTAL JUST VALUE	15,034,271
NCON VALUE	2,795,957
INCOME VALUE	
PREVIOUS YEAR MKT VALUE	10,362,869

PERMIT NUM	DESCRIPTION	AMT	ISSUED

SALES DATA

OFF RECORD Number	DATE	TYPE INST	Q / U	V / I	RSN CD	SALE PRICE
1953/0879	12/17/2014	SW	U	I	35	64,040,000
GRANTOR: HEALTH CARE REIT INC						
GRANTEE: AGI ACQUISITIONS LL						
1372/1784	12/09/2005	WD	U	I	19	13,897,900
GRANTOR: FORMATION PROPERTIES						
GRANTEE: HEALTH CARE REIT IN						

BLD DATE	05/16/2025	KW	LGL DATE		
XF DATE	08/10/2020	KK	LAND DATE	05/12/2025	DC
INC DATE			AG DATE		

BUILDING NOTES

BUILDING DIMENSIONS

EXTRA FEATURES

LN	OB/XF CODE	DESCRIPTION	BLD	CAP	L	W	UNITS	UT	Adj R	ADJ UNIT PRICE	ORIG COND	YEAR ON	YEAR ACTUAL	Q	% COND	OB/XF MKT VALUE	NOTES
31	0810	CONCRETE A	0	0	0	0	429.00	SF	6.50	6.50	100	2008	2008	3	88	2,454	
32	4950	BOLLARD	0	0	0	0	4.00	UT	100.00	100.00	100	2008	2008	3	100	400	
33	0505	FLAGPOLE A	0	0	0	0	18.00	LF	50.00	50.00	100	2008	2008	3	31	279	
34	0505	FLAGPOLE A	0	0	0	0	18.00	LF	50.00	50.00	100	2008	2008	3	31	279	
35	0810	CONCRETE A	0	0	0	0	1,917.00	SF	6.50	6.50	100	2008	2008	3	88	10,965	
36	0810	CONCRETE A	0	0	0	0	369.00	SF	6.50	6.50	100	1998	1998	3	73	1,751	

LAND DESCRIPTION

TOTAL OB/XF 16,128

LN	USE CODE	CLS	LAND USE DESCRIPTION	CAP	RD	LOC ZONE	FRONT	DEPTH	TOT LND UTS	UNIT TYPE	DT	DPTH FACT	% COND	TOT ADJ	UNIT PRICE	ADJ UNIT PRICE	LAND VALUE	OTHER ADJUSTMENTS AND NOTES	YEAR	DENSITY	DECL	FRZ	YR	CONSRV

REVIEW DATE 01/08/2025 BY KW Total Acres: 5.17 Total Land Value: 1,034,000 Market: 0 Agricultural: 0 Common: 1,034,000 PRINTED 07/30/2025 BY SYS