PT OF NW1/4 OF SW1/4
IN OR 1184/605

STORMER JAMES T & KIMBERLY A
9219 COUNTY ROAD 121
BRYCEVILLE, FL 32009

2025

20-1S-23-0000-0007-0080

NASSAU COUNTY PROPERTY

BUILDING CHARACTERISTICS

ELEMENT	CD	CONSTRUCTION
Exterior Wall	20	FACE BRICK 100
Roof Structur	03	GABLE/HIP 100
Roof Cover	03	COMP SHNGL 100
Interior Wall	05	DRYWALL 100
Interior Floo	14	CARPET 70
Interior Floo	08	SHT VINYL 30
Air Condition	03	CENTRAL 100
Heating Type	04	AIR DUCTED 100
Bedrooms		4 100
Bathrooms		2.5 100
Frame	02	WOOD FRAME 100
Stories	1.	1. 100
Units		0 100
Occupancy	00	NONE 100
Quality	06	Quality Level 06

DOR CODE 0100 SINGLE FAMILY
MAP NUM | MKT AREA 09
NEIGHBORHOOD/LOC 9001.00

AREA TYPE	TOTAL GROSS AREA	PCT OF BASE	YEAR	TOT ADJ AREA	SUBAREA MARKET VALUE
BAS	1,718	100	2004	1,718	175,732
FGR	667	55	2004	367	37,540
FOP	126	30	2004	38	3,887
FUS	286	100	2004	286	29,254
USP	232	30	2004	70	7,160
TOTALS	3,029			2,479	253,575

MARKET ADJUSTMENTS

TYPE	MDL	EFF. AREA	TOT ADJ PTS	EFF. BASE RATE	REPL. COST NEW	AYB	EYB	ECON	FNCT		NORM	% COND
0100	01	2,479	120.3360	120.34	298,323	2004	2004	0	0	0	15.00	85.00

1 SINGLE FAM – 100% - 2011 Heated Area: 2004 HX Base Yr 2011

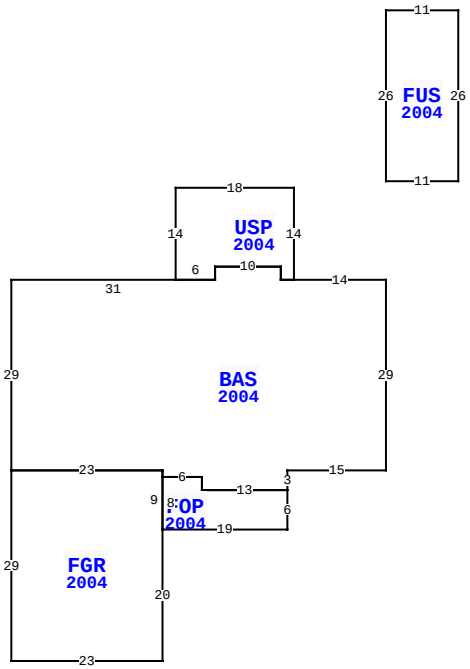

9219 CR 121, BRYCEVILLE

BLD DATE		LGL DATE	
XF DATE		LAND DATE	05/21/2025 MLU
INC DATE		AG DATE	

VALUATION SUMMARY

VALUATION BY		STANDARD
Tax Group: 6	Tax Dist:	
BUILDING MARKET VALUE		275,341
TOTAL MARKET OB/XF VALUE		4,373
TOTAL LAND VALUE - MARKET		78,300
TOTAL MARKET VALUE		358,014
SOH/AGL Deduction		188,328
ASSESSED VALUE		169,686
TOTAL EXEMPTION VALUE	HX HB	50,722
BASE TAXABLE VALUE		118,964
TOTAL JUST VALUE		358,014
NCON VALUE		0
INCOME VALUE		
PREVIOUS YEAR MKT VALUE		320,260

PERMIT NUM	DESCRIPTION	AMT	ISSUED
22014297	GARAGE	31,428	09/20/2022
M047834	H/AC	0	01/01/2004

SALES DATA

OFF RECORD Number	DATE	TYPE INST	Q U	V I	RSN CD	SALE PRICE
1184/0605	10/28/2003	WD	Q	V	06	100

GRANTOR: KELLY DONALD & SIODA
GRANTEE: STORMER JAMES T & K

BUILDING NOTES

BUILDING DIMENSIONS

BAS=[YR=2004] W14 USP=[YR=2004] N14 W18 S14 E6 N2 E10 S2 E2$ W2 N2 W10 S2 W31 S29 FGR=[YR=2004] S29 E23 N20 FOP=[YR=2004] E19 N6 W13 N2 W6 S8$ N9 W23$ E23 S1 E6 S2 E13 N3 E15 N29$ PTR=N15 FUS=[YR=2004] N26 E11 S26 W11$ S15$.

EXTRA FEATURES

LN	OB/XF CODE	DESCRIPTION	BLD	CAP	L	W	UNITS	UT	Adj R	ADJ UNIT PRICE	ORIG COND	YEAR ON	YEAR ACTUAL	Q	% COND	OB/XF MKT VALUE	NOTES
1	0810	CONCRETE A	0	100	20	20	400.00	SF	6.50	6.50	100	2002	2002	3	80	2,080	
2	0810	CONCRETE A	0	100	0	0	425.00	SF	6.50	6.50	100	2004	2004	3	83	2,293	

LAND DESCRIPTION

TOTAL OB/XF 4,373

LN	USE CODE	CLS	LAND USE DESCRIPTION	CAP	RD	LOC ZONE	FRONT	DEPTH	TOT LND UTS	UNIT TYPE	DT	DPTH FACT	% COND	TOT ADJ	UNIT PRICE	ADJ UNIT PRICE	LAND VALUE	OTHER ADJUSTMENTS AND NOTES	YEAR	DENSITY	DECL	FRZ	YR	CONSRV
1	000100	C	RES	100	0004	OR	0.00	0.00	1.74	AC		1.00	1.00	1.00	45,000.00	45,000.00	78,300							

REVIEW DATE 04/25/2023 BY WW Total Acres: 1.74 Total Land Value: 78,300 Market: 0 Agricultural: 0 Common: 78,300 PRINTED 07/30/2025 BY SYS

PT OF NW1/4 OF SW1/4
IN OR 1184/605

STORMER JAMES T & KIMBERLY A
9219 COUNTY ROAD 121
BRYCEVILLE, FL 32009

2025

20-1S-23-0000-0007-0080

NASSAU COUNTY PROPERTY

BUILDING CHARACTERISTICS

ELEMENT	CD	CONSTRUCTION
Exterior Wall	25	MOD METAL 100
Roof Structur	03	GABLE/HIP 100
Roof Cover	12	MODULAR MT 100
Interior Wall	07	NONE 0
Interior Floo	03	CONC FINSH 100
Interior Floo	01	NONE 0
Air Condition	01	NONE 0
Heating Type	01	NONE 0
Frame	05	STEEL 100
Stories	1.	1. 100
Units		0 100
Quality	06	Quality Level 06

DOR CODE 0100 SINGLE FAMILY
MAP NUM | MKT AREA 09
NEIGHBORHOOD/LOC 9001.00

AREA TYPE	TOTAL GROSS AREA	PCT OF BASE	YEAR	TOT ADJ AREA	SUBAREA MARKET VALUE
BAS	1,040	100	2024	1,040	21,766
TOTALS	1,040			1,040	21,766

MARKET ADJUSTMENTS

TYPE	MDL	EFF. AREA	TOT ADJ PTS	EFF. BASE RATE	REPL. COST NEW	AYB	EYB	ECON	FNCT		NORM	% COND
6500	01	1,040	57.1320	21.14	21,986	2023	2023	0	0	0	1.00	99.00

2 GARAGE RES – 100% - 2024 Heated Area: 1040 HX Base Yr 2011

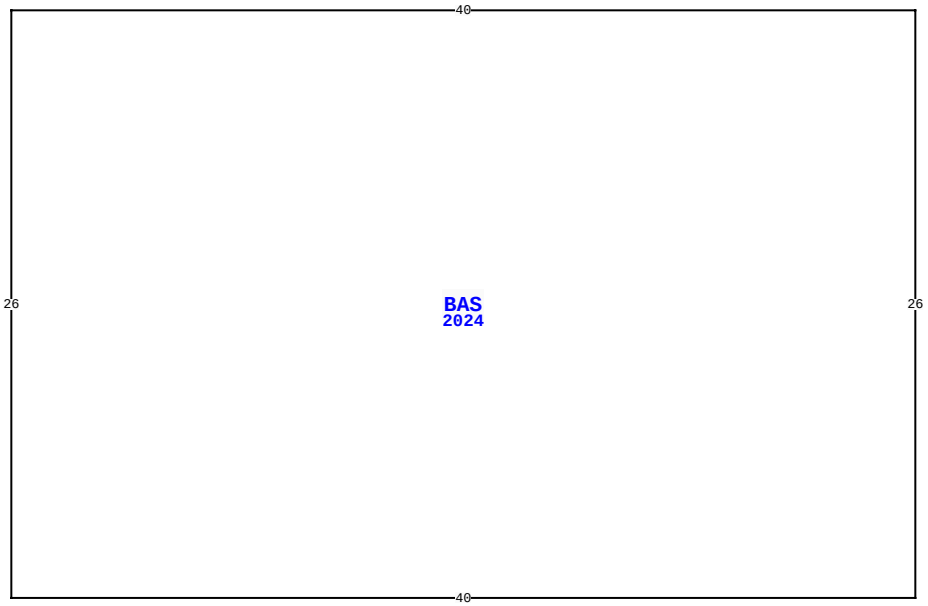

9219 CR 121, BRYCEVILLE

BLD DATE		LGL DATE	
XF DATE		LAND DATE	05/21/2025 MLU
INC DATE		AG DATE	

VALUATION SUMMARY

VALUATION BY		STANDARD
Tax Group: 6	Tax Dist:	
BUILDING MARKET VALUE		275,341
TOTAL MARKET OB/XF VALUE		4,373
TOTAL LAND VALUE - MARKET		78,300
TOTAL MARKET VALUE		358,014
SOH/AGL Deduction		188,328
ASSESSED VALUE		169,686
TOTAL EXEMPTION VALUE	HX HB	50,722
BASE TAXABLE VALUE		118,964
TOTAL JUST VALUE		358,014
NCON VALUE		0
INCOME VALUE		
PREVIOUS YEAR MKT VALUE		320,260

PERMIT NUM	DESCRIPTION	AMT	ISSUED

SALES DATA

OFF RECORD Number	DATE	TYPE INST	Q U	V I	RSN CD	SALE PRICE
1184/0605	10/28/2003	WD	Q	V	06	100

GRANTOR: KELLY DONALD & SIODA
GRANTEE: STORMER JAMES T & K

BUILDING NOTES

BUILDING DIMENSIONS

BAS=[YR=2024;ORIG=30,10] S26 E40 N26 W40 $
.

EXTRA FEATURES

L N	OB/XF CODE	DESCRIPTION	BLD	CAP	L	W	UNITS	UT	Adj R	ADJ UNIT PRICE	ORIG COND	YEAR ON	YEAR ACTUAL	Q	% COND	OB/XF MKT VALUE	NOTES

LAND DESCRIPTION

TOTAL OB/XF 0

L N	USE CODE	CLS	LAND USE DESCRIPTION	CAP	R D	LOC ZONE	FRONT	DEPTH	TOT LND UTS	UNIT TYPE	D T	DPTH FACT	% COND	TOT ADJ	UNIT PRICE	ADJ UNIT PRICE	LAND VALUE	OTHER ADJUSTMENTS AND NOTES	YEAR	DENSITY	DECL	FRZ	YR	CONSRV

REVIEW DATE 04/25/2023 BY WW Total Acres: 1.74 Total Land Value: 78,300 Market: 0 Agricultural: 0 Common: 78,300 PRINTED 07/30/2025 BY SYS