LOT 100
CRANE ISLAND PHASE 2E
OR 2547/578

**KRAEMER RONALD CARL & AVIS MARIE**
136 CRANE ISLAND DR
FERNANDINA BEACH, FL 32034

**2025**

**19-2N-28-1000-0100-0000**

## BUILDING CHARACTERISTICS

| ELEMENT | CD | CONSTRUCTION |
|---|---|---|
| Exterior Wall | 31 | HARDIE BRD 100 |
| Roof Structur | 08 | IRREGULAR 100 |
| Roof Cover | 13 | STAND SEAM 100 |
| Interior Wall | 05 | DRYWALL 100 |
| Interior Floo | 12 | HARDWOOD 80 |
| Interior Floo | 11 | CLAY TILE 20 |
| Air Condition | 03 | CENTRAL 100 |
| Heating Type | 04 | AIR DUCTED 100 |
| Bedrooms | | 4 100 |
| Bathrooms | | 4.5 100 |
| Frame | 02 | WOOD FRAME 100 |
| Stories | 2. | 2. 100 |
| Quality | 03 | Quality Level 03 |
| DOR CODE | 0100 | SINGLE FAMILY |
| MAP NUM | | MKT AREA 01 |
| NEIGHBORHOOD/LOC | 2036.0100 | |

| AREA TYPE | TOTAL GROSS AREA | PCT OF BASE | YEAR | TOT ADJ AREA | SUBAREA MARKET VALUE |
|---|---|---|---|---|---|
| BAS | 2,688 | 100 | 2025 | 2,688 | 1,391,255 |
| FGR | 789 | 55 | 2025 | 434 | 224,630 |
| FOP | 72 | 30 | 2025 | 22 | 11,387 |
| FOP | 104 | 30 | 2025 | 31 | 16,045 |
| FOP | 416 | 30 | 2025 | 125 | 64,698 |
| FSP | 128 | 40 | 2025 | 51 | 26,397 |
| FSP | 704 | 40 | 2025 | 282 | 145,958 |
| FUS | 418 | 100 | 2025 | 418 | 216,348 |
| FUS | 1,042 | 100 | 2025 | 1,042 | 539,318 |
| STR | 56 | 10 | 2025 | 6 | 3,105 |
| TOTALS | 7,285 | | | 5,186 | 2,684,170 |

## MARKET ADJUSTMENTS

| TYPE | MDL | EFF. AREA | TOT ADJ PTS | EFF. BASE RATE | REPL. COST NEW | AYB | EYB | ECON | FNCT | | NORM | % COND |
|---|---|---|---|---|---|---|---|---|---|---|---|---|
| 0500 | 22 | 5,186 | 327.5832 | 517.58 | 2,684,170 | 2024 | 2024 | 0 | 0 | 0 | 0.00 | 100.00 |

1 SFR CUST – 100% - 2025 Heated Area: 4148 HX Base Yr 2025

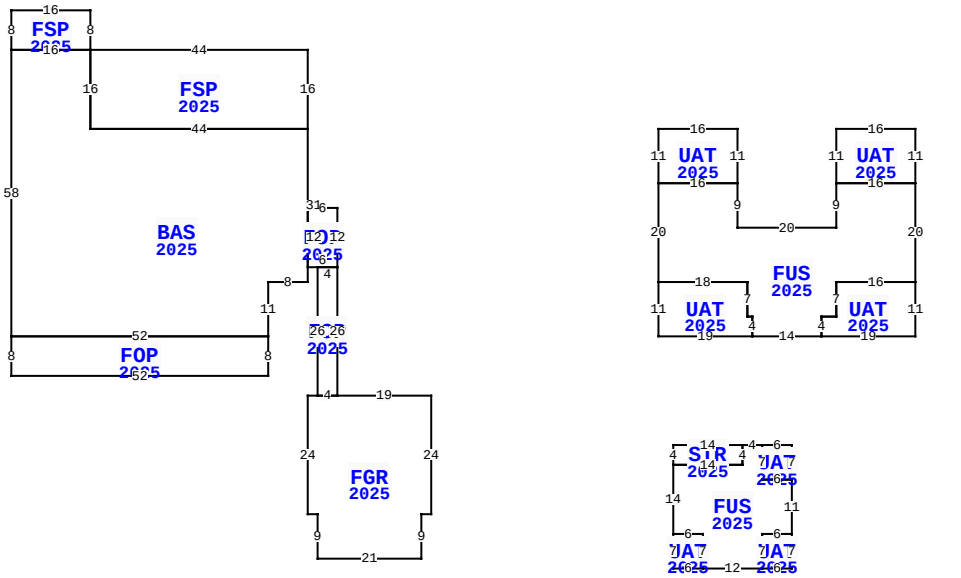


** This building has 17 Sub-Areas

136 CRANE ISLAND DR, FERNANDINA BEACH

| | | | |
|---|---|---|---|
| BLD DATE | | LGL DATE | |
| XF DATE | | LAND DATE | |
| INC DATE | | AG DATE | |

## NASSAU COUNTY PROPERTY

PAGE 1 of 1 2

### VALUATION SUMMARY

| | | |
|---|---|---|
| VALUATION BY | | STANDARD |
| Tax Group: 2 | Tax Dist: | |
| BUILDING MARKET VALUE | | 2,684,170 |
| TOTAL MARKET OB/XF VALUE | | 48,500 |
| TOTAL LAND VALUE - MARKET | | 750,000 |
| TOTAL MARKET VALUE | | 3,482,670 |
| SOH/AGL Deduction | | 0 |
| ASSESSED VALUE | | 3,482,670 |
| TOTAL EXEMPTION VALUE | HX HB | 50,722 |
| BASE TAXABLE VALUE | | 3,431,948 |
| TOTAL JUST VALUE | | 3,482,670 |
| NCON VALUE | | 2,732,670 |
| INCOME VALUE | | |
| PREVIOUS YEAR MKT VALUE | | 750,000 |

| PERMIT NUM | DESCRIPTION | AMT | ISSUED |
|---|---|---|---|
| 2023-0136 | DGR | | 03/20/2023 |
| 2023-0135 | SFR HTD- 3710 | | 03/06/2023 |

## SALES DATA

| OFF RECORD Number | DATE | TYPE INST | Q / U | V / I | RSN CD | SALE PRICE |
|---|---|---|---|---|---|---|
| 2573/0466 | 6/24/2022 | WD | Q | V | 01 | 850,000 |

GRANTOR: THE RANGE AT CRANE IS

GRANTEE: KRAEMER RONALD CARL

## BUILDING NOTES

## BUILDING DIMENSIONS

BAS=[YR=2025;ORIG=40,60] N58 E16 S16 E44 S31 W8 S11 W52 $
FSP=[YR=2025;ORIG=40,-6] E16 S8 W16 N8 $
FSP=[YR=2025;ORIG=56,2] E44 S16 W44 N16 $
FOP=[YR=2025;ORIG=40,60] E52 S8 W52 N8 $
FOP=[YR=2025;ORIG=100,34] E6 S12 W6 N12 $
FUS=[YR=2025;ORIG=190,60] E14 N4 E3 N7 E16 N20 W16 S9 W20 N9 W16 S20 E18 S7 E1 S4 $
UAT=[YR=2025;ORIG=171,49] S11 E19 N4 W1 N7 W18 $
UAT=[YR=2025;ORIG=204,60] E19 N11 W16 S7 W3 S4 $
UAT=[YR=2025;ORIG=171,29] N11 E16 S11 W16 $
UAT=[YR=2025;ORIG=207,29] N11 E16 S11 W16 $
FOP=[YR=2025;ORIG=106,46] W4 S26 E4 N26 $

## EXTRA FEATURES

| LN | OB/XF CODE | DESCRIPTION | BLD | CAP | L | W | UNITS | UT | Adj R | ADJ UNIT PRICE | ORIG COND | YEAR ON | YEAR ACTUAL | Q | % COND | OB/XF MKT VALUE | NOTES |
|---|---|---|---|---|---|---|---|---|---|---|---|---|---|---|---|---|---|
| 1 | 0855 | CONC PAVER | 0 | 100 | 0 | 0 | 2,350.00 | SF | 10.00 | 10.00 | 100 | 2025 | 2024 | | 100 | 23,500 | |
| 2 | 0502 | FP-CUSTOM | 0 | 100 | 0 | 0 | 2.00 | UT | 10,000.00 | 10,000.00 | 100 | 2025 | 2024 | | 100 | 20,000 | |
| 3 | 0600 | SUMMER KIT | 0 | 100 | 0 | 0 | 1.00 | UT | 5,000.00 | 5,000.00 | 100 | 2025 | 2024 | | 100 | 5,000 | |

## LAND DESCRIPTION

TOTAL OB/XF 48,500

| LN | USE CODE | CLS | LAND USE DESCRIPTION | CAP | RD | LOC ZONE | FRONT | DEPTH | TOT LND UTS | UNIT TYPE | DT | DPTH FACT | % COND | TOT ADJ | UNIT PRICE | ADJ UNIT PRICE | LAND VALUE | OTHER ADJUSTMENTS AND NOTES | YEAR | DENSITY | DECL | FRZ | YR | CONSRV |
|---|---|---|---|---|---|---|---|---|---|---|---|---|---|---|---|---|---|---|---|---|---|---|---|---|
| 1 | 000100 | C | RES | 100 | | R-1 | 0.00 | 0.00 | 1.00 | LT | | 1.00 | 1.00 | 1.00 | 750,000.00 | 750,000.00 | 750,000 | | | | | | | |

REVIEW DATE 12/30/2024 BY HS Total Acres: 0.00 Total Land Value: 750,000 Market: 0 Agricultural: 0 Common: 750,000 PRINTED 07/30/2025 BY SYS