IN DB 92 PG 215 EX 5-1
IN OR 87 PG 423
ESMT IN OR 414/660

TIITF/DIV OF FORESTRY
C/O DEP 3900 COMMONWEALTH BLVD
TALLAHASSEE, FL 32399

2025

19-1S-24-0000-0005-0000

NASSAU COUNTY PROPERTY

BUILDING CHARACTERISTICS

ELEMENT	CD	CONSTRUCTION
Exterior Wall	15	CONC BLOCK 100
Roof Structur	03	GABLE/HIP 100
Roof Cover	03	COMP SHNGL 100
Interior Wall	01	MINIMUM 50
Interior Wall	05	DRYWALL 50
Interior Floo	07	CORK/VTILE 100
Ceiling	02	F.NOT SUS 100
Air Condition	03	CENTRAL 100
Heating Type	04	AIR DUCTED 100
Fixtures		12 100
Frame	03	MASONRY 100
Story Height		8 100
RMS		6 100
Stories	1.	1. 100
Units		0 100
Occupancy	00	NONE 100
Quality	03	Quality Level 03

DOR CODE 8700 STATE
MAP NUM | MKT AREA 09
NEIGHBORHOOD/LOC 9001.00

AREA TYPE	TOTAL GROSS AREA	PCT OF BASE	YEAR	TOT ADJ AREA	SUBAREA MARKET VALUE
BAS	3,200	100	1998	3,200	261,306
CAN	126	30	1999	38	3,103
TOTALS	3,326			3,238	264,410

MARKET ADJUSTMENTS

TYPE	MDL	EFF. AREA	TOT ADJ PTS	EFF. BASE RATE	REPL. COST NEW	AYB	EYB	ECON	FNCT		NORM	% COND
0303	04	3,238	86.1120	93.86	303,919	1998	1998	0	0	0	13.00	87.00

1 CLUB HOUSE – 0% - 0 Heated Area: 3200 HX Base Yr

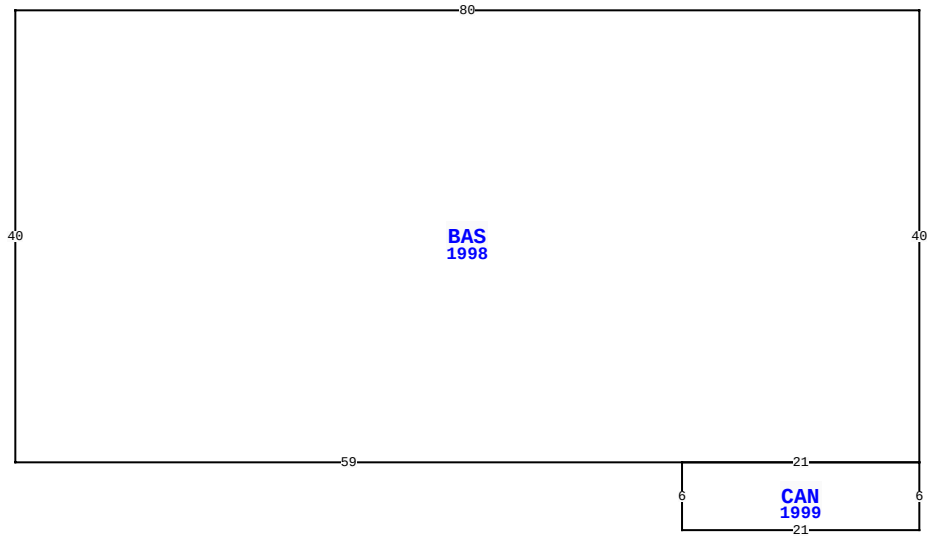

7280 MOTES RD, BRYCEVILLE

BLD DATE	10/30/2024	KWA	LGL DATE	
XF DATE			LAND DATE	05/09/2025 MLU
INC DATE			AG DATE	

NASSAU COUNTY PROPERTY — VALUATION SUMMARY

VALUATION BY		STANDARD
Tax Group: 6	Tax Dist:	
BUILDING MARKET VALUE		1,843,399
TOTAL MARKET OB/XF VALUE		154,466
TOTAL LAND VALUE - MARKET		333,500
TOTAL MARKET VALUE		2,331,365
SOH/AGL Deduction		636,538
ASSESSED VALUE		1,694,827
TOTAL EXEMPTION VALUE	07	1,694,827
BASE TAXABLE VALUE		0
TOTAL JUST VALUE		2,331,365
NCON VALUE		0
INCOME VALUE		
PREVIOUS YEAR MKT VALUE		2,365,151

PERMIT NUM	DESCRIPTION	AMT	ISSUED
B230014037		22,900	10/31/2023
B25474	ADDITION	8,721	01/01/2012
C24270	CO ISSUED	0	09/08/2011
M16053	H/AC	0	04/01/2011
E23243	ELEC OTHER	0	02/01/2011
P14592	NEW CONSTR	0	01/01/2011

SALES DATA

OFF RECORD Number	DATE	TYPE INST	Q U	V I	RSN CD	SALE PRICE

BUILDING NOTES

BUILDING DIMENSIONS

BAS=[YR=1998] W80 S40 E59 CAN=[YR=1999] S6 E21 N6 W21$ E21 N40$.

EXTRA FEATURES

LN	OB/XF CODE	DESCRIPTION	BLD	CAP	L	W	UNITS	UT	Adj R	ADJ UNIT PRICE	ORIG COND	YEAR ON	YEAR ACTUAL	Q	% COND	OB/XF MKT VALUE	NOTES
1	0423	CL FNC 5'	0	0	0	0	570.00	LF	6.85	6.85	100	1998	1998	3	42	1,640	
2	0422	CL FNC 4'	0	0	0	0	596.00	LF	15.00	15.00	100	1998	1998	3	42	3,755	
3	0680	POLE SHED	0	0	6	25	150.00	SF	10.00	10.00	100	1998	1998	3	25	375	
4	0424	CL FNC 6'	0	0	0	0	139.00	LF	20.00	20.00	100	1998	1998	3	42	1,168	
5	0680	POLE SHED	0	0	6	25	150.00	SF	10.00	10.00	100	1998	1998	3	25	375	
6	0680	POLE SHED	0	0	6	30	180.00	SF	10.00	10.00	100	1998	1998	3	25	450	
7	0680	POLE SHED	0	0	6	30	180.00	SF	10.00	10.00	100	1998	1998	3	25	450	
8	0463	FENCE GATE	0	0	0	0	5.00	UT	300.00	300.00	100	1998	1998	3	42	630	
9	0422	CL FNC 4'	0	0	0	0	107.00	LF	15.00	15.00	100	2003	2003	3	58	931	
10	0424	CL FNC 6'	0	0	0	0	206.00	LF	20.00	20.00	100	2002	2002	3	55	2,266	

TOTAL OB/XF 12,040

LAND DESCRIPTION

LN	USE CODE	CLS	LAND USE DESCRIPTION	CAP	RD	LOC ZONE	FRONT	DEPTH	TOT LND UTS	UNIT TYPE	DT	DPTH FACT	% COND	TOT ADJ	UNIT PRICE	ADJ UNIT PRICE	LAND VALUE	OTHER ADJUSTMENTS AND NOTES	YEAR	DENSITY	DECL	FRZ	YR	CONSRV
1	008700	C	STATE	0	0006	OR	0.00	0.00	23.00	AC		1.00	1.00	1.00	14,500.00	14,500.00	333,500							

REVIEW DATE 10/30/2024 BY KWA Total Acres: 23.00 Total Land Value: 333,500 Market: 0 Agricultural: 0 Common: 333,500 PRINTED 07/30/2025 BY SYS

IN DB 92 PG 215 EX 5-1
IN OR 87 PG 423
ESMT IN OR 414/660

TIITF/DIV OF FORESTRY
C/O DEP 3900 COMMONWEALTH BLVD
TALLAHASSEE, FL 32399

2025

19-1S-24-0000-0005-0000

NASSAU COUNTY PROPERTY

BUILDING CHARACTERISTICS

ELEMENT	CD	CONSTRUCTION
Exterior Wall	15	CONC BLOCK 100
Roof Structur	03	GABLE/HIP 100
Roof Cover	03	COMP SHNGL 100
Interior Wall	01	MINIMUM 100
Interior Floo	03	CONC FINSH 100
Ceiling	02	F.NOT SUS 100
Air Condition	03	CENTRAL 100
Heating Type	04	AIR DUCTED 100
Fixtures		6 100
Frame	03	MASONRY 100
Story Height		8 100
RMS		4 100
Stories	1.	1. 100
Units		0 100
Occupancy	00	NONE 100
Quality	03	Quality Level 03

DOR CODE	8700	STATE	
MAP NUM		MKT AREA	09
NEIGHBORHOOD/LOC	9001.00		

AREA TYPE	TOTAL GROSS AREA	PCT OF BASE	YEAR	TOT ADJ AREA	SUBAREA MARKET VALUE
BAS	884	100	2003	884	51,498
CAN	1,060	30	2004	318	18,526
TOTALS	1,944			1,202	70,023

MARKET ADJUSTMENTS

TYPE	MDL	EFF. AREA	TOT ADJ PTS	EFF. BASE RATE	REPL. COST NEW	AYB	EYB	ECON	FNCT		NORM	% COND
1103	04	1,202	77.4900	65.09	78,238	2003	2003	0	0	0	10.50	89.50

2 CONCESSION – 0% - 0 Heated Area: 884 HX Base Yr

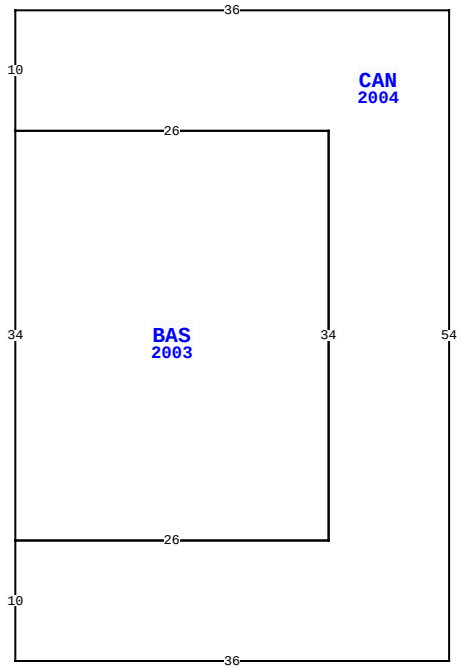

7280 MOTES RD, BRYCEVILLE

BLD DATE	10/30/2024	KWA	LGL DATE		
XF DATE			LAND DATE	05/09/2025	MLU
INC DATE			AG DATE		

VALUATION SUMMARY

VALUATION BY		STANDARD
Tax Group: 6	Tax Dist:	
BUILDING MARKET VALUE		1,843,399
TOTAL MARKET OB/XF VALUE		154,466
TOTAL LAND VALUE - MARKET		333,500
TOTAL MARKET VALUE		2,331,365
SOH/AGL Deduction		636,538
ASSESSED VALUE		1,694,827
TOTAL EXEMPTION VALUE	07	1,694,827
BASE TAXABLE VALUE		0
TOTAL JUST VALUE		2,331,365
NCON VALUE		0
INCOME VALUE		
PREVIOUS YEAR MKT VALUE		2,365,151

PERMIT NUM	DESCRIPTION	AMT	ISSUED
B24270	NEW CONSTR	781,206	01/01/2011
E0922149	ELEC OTHER	16,000	10/01/2009
B21663	XFOB	3,200	07/01/2008
B21664	XFOB	3,200	07/01/2008
B21665	XFOB	3,200	07/01/2008
M12279	MECH OTHER	0	11/01/2006

SALES DATA

OFF RECORD Number	DATE	TYPE INST	Q U	V I	RSN CD	SALE PRICE

BUILDING NOTES

BUILDING DIMENSIONS

CAN=[YR=2004] W36 S10 BAS=[YR=2003] S34 E26 N34 W26$ E26 S34 W26 S10 E36 N54$.

EXTRA FEATURES

LN	OB/XF CODE	DESCRIPTION	BLD	CAP	L	W	UNITS	UT	Adj R	ADJ UNIT PRICE	ORIG COND	YEAR ON	YEAR ACTUAL	Q	% COND	OB/XF MKT VALUE	NOTES
11	0463	FENCE GATE	0	0	0	0	7.00	UT	300.00	300.00	100	2002	2002	3	55	1,155	
12	0940	SHEDS/PORT	0	0	8	8	64.00	SF	30.00	30.00	100	1999	1999	3	20	384	
13	0812	CONCRETE C	0	0	0	0	1,176.00	SF	4.00	4.00	100	1998	1998	3	73	3,434	
14	0812	CONCRETE C	0	0	0	0	2,396.00	SF	4.00	4.00	100	2002	2002	3	80	7,667	
15	0810	CONCRETE A	0	0	18	10	180.00	SF	6.50	6.50	100	2003	2003	3	82	959	
16	0940	SHEDS/PORT	0	0	20	14	280.00	SF	19.50	19.50	100	2002	2002	3	20	1,092	
17	0810	CONCRETE A	0	0	40	23	920.00	SF	13.00	13.00	100	2001	2001	3	79	9,448	
18	0803	ASPHALT C	0	0	0	0	1,614.00	SF	2.00	2.00	100	1995	1995	3	50	1,614	
19	0422	CL FNC 4'	0	0	0	0	400.00	LF	15.00	15.00	100	1995	1995	3	32	1,920	
20	0998	T-CRT LGHT	0	0	0	0	5.00	UT	4,000.00	4,000.00	100	2004	2004	3	21	4,200	

TOTAL OB/XF 31,873

LAND DESCRIPTION

LN	USE CODE	CLS	LAND USE DESCRIPTION	CAP	RD	LOC ZONE	FRONT	DEPTH	TOT LND UTS	UNIT TYPE	DT	DPTH FACT	% COND	TOT ADJ	UNIT PRICE	ADJ UNIT PRICE	LAND VALUE	OTHER ADJUSTMENTS AND NOTES	YEAR	DENSITY	DECL	FRZ	YR	CONSRV

REVIEW DATE 10/30/2024 BY KWA Total Acres: 23.00 Total Land Value: 333,500 Market: 0 Agricultural: 0 Common: 333,500 PRINTED 07/30/2025 BY SYS

IN DB 92 PG 215 EX 5-1
IN OR 87 PG 423
ESMT IN OR 414/660

TIITF/DIV OF FORESTRY
C/O DEP 3900 COMMONWEALTH BLVD
TALLAHASSEE, FL 32399

2025

19-1S-24-0000-0005-0000

NASSAU COUNTY PROPERTY

BUILDING CHARACTERISTICS

ELEMENT	CD	CONSTRUCTION
Exterior Wall	20	FACE BRICK 70
Exterior Wall	25	MOD METAL 30
Roof Structur	10	STEEL FRME 100
Roof Cover	12	MODULAR MT 100
Interior Wall	05	DRYWALL 100
Interior Floo	11	CLAY TILE 100
Ceiling	01	FIN.SUSPD 100
Air Condition	03	CENTRAL 100
Heating Type	04	AIR DUCTED 100
Fixtures		17 100
Frame	05	STEEL 100
Story Height		14 100
RMS		15 100
Stories	1.	1. 100
Units		0 100
Occupancy	00	NONE 100
Quality	04	Quality Level 04

DOR CODE 8700 STATE
MAP NUM | MKT AREA 09
NEIGHBORHOOD/LOC 9001.00

AREA TYPE	TOTAL GROSS AREA	PCT OF BASE	YEAR	TOT ADJ AREA	SUBAREA MARKET VALUE
BAS	3,531	100	2011	3,531	864,679
CAN	42	30	2011	13	3,183
CAN	260	30	2011	78	19,101
FGR	4,048	60	2011	2,429	594,820
FST	42	50	2011	21	5,142
FST	80	50	2011	40	9,795
FST	99	50	2011	50	12,244
TOTALS	8,102			6,162	1,508,966

MARKET ADJUSTMENTS

TYPE	MDL	EFF. AREA	TOT ADJ PTS	EFF. BASE RATE	REPL. COST NEW	AYB	EYB	ECON	FNCT		NORM	% COND
8901	04	6,162	145.7021	249.88	1,539,761	2011	2011	0	0	0	2.00	98.00

3 GOVT BLDG - 0% - 0 Heated Area: 3531 HX Base Yr

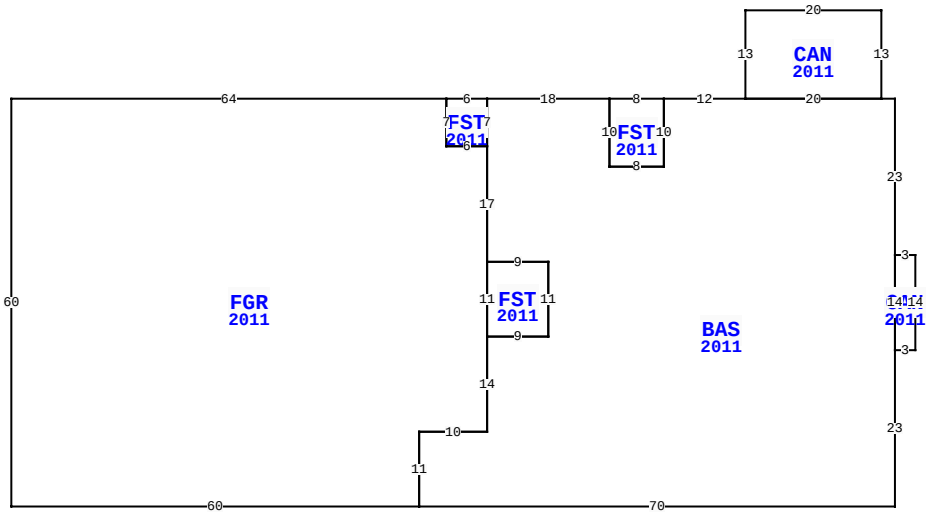

7280 MOTES RD, BRYCEVILLE

BLD DATE	10/30/2024 KWA	LGL DATE	
XF DATE		LAND DATE	05/09/2025 MLU
INC DATE		AG DATE	

NASSAU COUNTY PROPERTY — VALUATION SUMMARY

VALUATION BY		STANDARD
Tax Group: 6	Tax Dist:	
BUILDING MARKET VALUE		1,843,399
TOTAL MARKET OB/XF VALUE		154,466
TOTAL LAND VALUE - MARKET		333,500
TOTAL MARKET VALUE		2,331,365
SOH/AGL Deduction		636,538
ASSESSED VALUE		1,694,827
TOTAL EXEMPTION VALUE	07	1,694,827
BASE TAXABLE VALUE		0
TOTAL JUST VALUE		2,331,365
NCON VALUE		0
INCOME VALUE		
PREVIOUS YEAR MKT VALUE		2,365,151

PERMIT NUM	DESCRIPTION	AMT	ISSUED
B029375	NEW CONSTR	44,985	02/01/2002
B985317	NEW CONSTR	125,000	08/01/1998
B984804	NEW CONSTR	3,500	03/01/1998

SALES DATA

OFF RECORD Number	DATE	TYPE INST	Q U	V I	RSN CD	SALE PRICE

BUILDING NOTES

EXTRA FEATURES

LN	OB/XF CODE	DESCRIPTION	BLD	CAP	L	W	UNITS	UT	Adj R	ADJ UNIT PRICE	ORIG COND	YEAR ON	YEAR ACTUAL	Q	% COND	OB/XF MKT VALUE	NOTES
21	0097	AWNING CN	0	0	0	0	108.00	SF	65.00	65.00	100	2008	2008	3	48	3,370	
22	0505	FLAGPOLE A	0	0	0	0	20.00	LF	50.00	50.00	100	2005	2005	3	22	220	
23	0505	FLAGPOLE A	0	0	0	0	25.00	LF	50.00	50.00	100	2005	2005	3	22	275	
24	0972	ST LGHT UN	0	0	0	0	1.00	UT	2,530.00	2,530.00	100	2004	2004	3	61	1,543	
25	0418	EXHST FAN	2	0	0	0	1.00	UT	400.00	400.00	100	2003	2003	3	20	80	
26	0978	SECURTY LT	0	0	0	0	5.00	UT	450.00	450.00	100	1998	1998	3	42	945	
27	0462	ST/AL FNC	0	0	18	3	54.00	SF	10.00	10.00	100	1998	1998	3	25	135	
28	0424	CL FNC 6'	0	0	0	0	512.00	LF	20.00	20.00	100	2015	2015	3	87	8,909	
29	0463	FENCE GATE	0	0	0	0	4.00	UT	300.00	300.00	100	2015	2015	3	87	1,044	
30	0812	CONCRETE C	0	0	0	0	1,275.00	SF	4.00	4.00	100	2015	2015	3	95	4,845	

TOTAL OB/XF 21,366

BUILDING DIMENSIONS

FGR=[YR=2011;ORIG=-66,0] W64 S60 E60 N11 E10 N14 N11 N17 W6 N7 $
BAS=[YR=2011;ORIG=0,0] W2 W20 W12 S10 W8 N10 W18 S7 S17 E9 S11 W9 S14 W10 S11 E70 N23 N14 N23 $
CAN=[YR=2011;ORIG=-2,0] N13 W20 S13 E20 $
FST=[YR=2011;ORIG=-60,35] E9 N11 W9 S11 $
FST=[YR=2011;ORIG=-34,0] W8 S10 E8 N10 $
FST=[YR=2011;ORIG=-60,0] W6 S7 E6 N7 $
CAN=[YR=2011;ORIG=0,37] E3 N14 W3 S14 $
.

LAND DESCRIPTION

LN	USE CODE	CLS	LAND USE DESCRIPTION	CAP	RD	LOC ZONE	FRONT	DEPTH	TOT LND UTS	UNIT TYPE	DT	DPTH FACT	% COND	TOT ADJ	UNIT PRICE	ADJ UNIT PRICE	LAND VALUE	OTHER ADJUSTMENTS AND NOTES	YEAR	DENSITY	DECL	FRZ	YR	CONSRV

REVIEW DATE 10/30/2024 BY KWA Total Acres: 23.00 Total Land Value: 333,500 Market: 0 Agricultural: 0 Common: 333,500 PRINTED 07/30/2025 BY SYS

IN DB 92 PG 215 EX 5-1
IN OR 87 PG 423
ESMT IN OR 414/660

TIITF/DIV OF FORESTRY
C/O DEP 3900 COMMONWEALTH BLVD
TALLAHASSEE, FL 32399

2025

19-1S-24-0000-0005-0000

NASSAU COUNTY PROPERTY

BUILDING CHARACTERISTICS

ELEMENT	CD	CONSTRUCTION

DOR CODE	8700	STATE	
MAP NUM		MKT AREA	09
NEIGHBORHOOD/LOC	9001.00		

AREA TYPE	TOTAL GROSS AREA	PCT OF BASE	YEAR	TOT ADJ AREA	SUBAREA MARKET VALUE
TOTALS					

MARKET ADJUSTMENTS

TYPE	MDL	EFF. AREA	TOT ADJ PTS	EFF. BASE RATE	REPL. COST NEW	AYB	EYB	ECON	FNCT		NORM	% COND

BLD DATE	10/30/2024	KWA	LGL DATE
XF DATE			LAND DATE 05/09/2025 MLU
INC DATE			AG DATE

VALUATION SUMMARY

VALUATION BY		STANDARD
Tax Group: 6	Tax Dist:	
BUILDING MARKET VALUE		1,843,399
TOTAL MARKET OB/XF VALUE		154,466
TOTAL LAND VALUE - MARKET		333,500
TOTAL MARKET VALUE		2,331,365
SOH/AGL Deduction		636,538
ASSESSED VALUE		1,694,827
TOTAL EXEMPTION VALUE	07	1,694,827
BASE TAXABLE VALUE		0
TOTAL JUST VALUE		2,331,365
NCON VALUE		0
INCOME VALUE		
PREVIOUS YEAR MKT VALUE		2,365,151

PERMIT NUM	DESCRIPTION	AMT	ISSUED

SALES DATA

OFF RECORD Number	DATE	TYPE INST	Q / U	V / I	RSN CD	SALE PRICE

BUILDING NOTES

BUILDING DIMENSIONS

EXTRA FEATURES

LN	OB/XF CODE	DESCRIPTION	BLD	CAP	L	W	UNITS	UT	Adj R	ADJ UNIT PRICE	ORIG COND	YEAR ON	YEAR ACTUAL	Q	% COND	OB/XF MKT VALUE	NOTES
31	0680	POLE SHED	0	0	20	5	100.00	SF	10.00	10.00	100	2015	2015	3	75	750	
32	0422	CL FNC 4'	0	0	0	0	132.00	LF	15.00	15.00	100	2015	2015	3	87	1,723	
33	0812	CONCRETE C	0	0	0	0	13,519.00	SF	4.00	4.00	100	2011	2011	3	91	49,209	
34	0803	ASPHALT C	0	0	0	0	8,118.00	SF	2.00	2.00	100	2011	2011	3	66	10,716	
35	0803	ASPHALT C	0	0	0	0	1,292.00	SF	2.00	2.00	100	2014	2014	3	72	1,860	
36	4950	BOLLARD	0	0	0	0	12.00	UT	100.00	100.00	100	2011	2011	3	100	1,200	
37	0402	CONC BUMPE	0	0	0	0	13.00	UT	25.00	25.00	100	2011	2011	3	94	306	
38	0400	CONC CURB	0	0	0	0	306.00	LF	15.00	15.00	100	2011	2011	3	94	4,315	
39	0978	SECURTY LT	0	0	0	0	5.00	UT	450.00	450.00	100	2011	2011	3	78	1,755	
40	0418	EXHST FAN	0	0	0	0	2.00	UT	400.00	400.00	100	2011	2011	3	45	360	

TOTAL OB/XF 72,194

LAND DESCRIPTION

LN	USE CODE	CLS	LAND USE DESCRIPTION	CAP	RD	LOC ZONE	FRONT	DEPTH	TOT LND UTS	UNIT TYPE	DT	DPTH FACT	% COND	TOT ADJ	UNIT PRICE	ADJ UNIT PRICE	LAND VALUE	OTHER ADJUSTMENTS AND NOTES	YEAR	DENSITY	DECL	FRZ	YR	CONSRV

REVIEW DATE 10/30/2024 BY KWA Total Acres: 23.00 Total Land Value: 333,500 Market: 0 Agricultural: 0 Common: 333,500 PRINTED 07/30/2025 BY SYS

IN DB 92 PG 215 EX 5-1
IN OR 87 PG 423
ESMT IN OR 414/660

TIITF/DIV OF FORESTRY
C/O DEP 3900 COMMONWEALTH BLVD
TALLAHASSEE, FL 32399

2025

19-1S-24-0000-0005-0000

BUILDING CHARACTERISTICS

ELEMENT	CD	CONSTRUCTION

DOR CODE	8700	STATE	
MAP NUM		MKT AREA	09
NEIGHBORHOOD/LOC	9001.00		

AREA TYPE	TOTAL GROSS AREA	PCT OF BASE	YEAR	TOT ADJ AREA	SUBAREA MARKET VALUE
TOTALS					

MARKET ADJUSTMENTS

TYPE	MDL	EFF. AREA	TOT ADJ PTS	EFF. BASE RATE	REPL. COST NEW	AYB	EYB	ECON	FNCT		NORM	% COND

BLD DATE	10/30/2024	KWA	LGL DATE
XF DATE			LAND DATE 05/09/2025 MLU
INC DATE			AG DATE

NASSAU COUNTY PROPERTY

PAGE 5 of 5 6

VALUATION SUMMARY

VALUATION BY		STANDARD
Tax Group: 6	Tax Dist:	
BUILDING MARKET VALUE		1,843,399
TOTAL MARKET OB/XF VALUE		154,466
TOTAL LAND VALUE - MARKET		333,500
TOTAL MARKET VALUE		2,331,365
SOH/AGL Deduction		636,538
ASSESSED VALUE		1,694,827
TOTAL EXEMPTION VALUE	07	1,694,827
BASE TAXABLE VALUE		0
TOTAL JUST VALUE		2,331,365
NCON VALUE		0
INCOME VALUE		
PREVIOUS YEAR MKT VALUE		2,365,151

PERMIT NUM	DESCRIPTION	AMT	ISSUED

SALES DATA

OFF RECORD Number	DATE	TYPE INST	Q U /	V I /	RSN CD	SALE PRICE

BUILDING NOTES

BUILDING DIMENSIONS

EXTRA FEATURES

LN	OB/XF CODE	DESCRIPTION	BLD	CAP	L	W	UNITS	UT	Adj R	ADJ UNIT PRICE	ORIG COND	YEAR ON	YEAR ACTUAL	Q	% COND	OB/XF MKT VALUE	NOTES
41	0462	ST/AL FNC	0	0	18	3	54.00	SF	10.00	10.00	100	2011	2011	3	60	324	
42	0505	FLAGPOLE A	0	0	0	0	25.00	LF	50.00	50.00	100	2011	2011	3	45	563	
43	0971	ST LGHT OV	0	0	0	0	1.00	UT	1,555.00	1,555.00	100	2011	2011	3	78	1,213	
44	0424	CL FNC 6'	0	0	0	0	41.00	LF	20.00	20.00	100	2011	2011	3	78	640	
45	0479	VF PICKET	0	0	0	0	8.00	LF	10.00	10.00	100	2011	2011	3	78	62	
46	0424	CL FNC 6'	0	0	0	0	142.00	LF	20.00	20.00	100	2011	2011	3	78	2,215	
47	0464	FNC GT 10'	0	0	0	0	2.00	UT	350.00	350.00	100	2011	2011	3	78	546	
48	0463	FENCE GATE	0	0	0	0	2.00	UT	300.00	300.00	100	2011	2011	3	78	468	
49	0476	VF 6 SBPL	0	0	0	0	18.00	LF	32.00	32.00	100	2011	2011	3	78	449	
50	0966	FIRE SPRNK	0	0	0	0	3,851.00	SF	3.00	3.00	100	2011	2011	3	91	10,513	

TOTAL OB/XF 16,993

LAND DESCRIPTION

LN	USE CODE	CLS	LAND USE DESCRIPTION	CAP	RD	LOC ZONE	FRONT	DEPTH	TOT LND UTS	UNIT TYPE	DT	DPTH FACT	% COND	TOT ADJ	UNIT PRICE	ADJ UNIT PRICE	LAND VALUE	OTHER ADJUSTMENTS AND NOTES	YEAR	DENSITY	DECL	FRZ	YR	CONSRV

REVIEW DATE 10/30/2024 BY KWA Total Acres: 23.00 Total Land Value: 333,500 Market: 0 Agricultural: 0 Common: 333,500 PRINTED 07/30/2025 BY SYS