PT OF NW1/4 OF NW1/4
PARCEL 4-17 SECT 16-4N-24 &
PARCEL 1-9 SECT 17-4N-24

LEE JEFFREY A & ANGELA B
273939 MURRHEE ROAD
HILLIARD, FL 32046

2025

16-4N-24-0000-0004-0170

NASSAU COUNTY PROPERTY

BUILDING CHARACTERISTICS

ELEMENT	CD	CONSTRUCTION
Exterior Wall	30	VINYL 90
Exterior Wall	20	FACE BRICK 10
Roof Structur	08	IRREGULAR 100
Roof Cover	03	COMP SHNGL 100
Interior Wall	05	DRYWALL 100
Interior Floo	14	CARPET 60
Interior Floo	12	HARDWOOD 40
Air Condition	03	CENTRAL 100
Heating Type	04	AIR DUCTED 100
Bedrooms		4 100
Bathrooms		3.5 100
Frame	02	WOOD FRAME 100
Stories	2.	2. 100
Units		0 100
Occupancy	00	NONE 100
Quality	02	Quality Level 02
DOR CODE	0100	SINGLE FAMILY
MAP NUM		MKT AREA 09
NEIGHBORHOOD/LOC	9001.00	

AREA TYPE	TOTAL GROSS AREA	PCT OF BASE	YEAR	TOT ADJ AREA	SUBAREA MARKET VALUE
BAS	1,867	100	2006	1,867	216,194
FGR	593	55	2006	326	37,750
FOP	218	30	2006	65	7,527
FOP	229	30	2006	69	7,990
FUS	989	100	2006	989	114,524
TOTALS	3,896			3,316	383,985

MARKET ADJUSTMENTS

TYPE	MDL	EFF. AREA	TOT ADJ PTS	EFF. BASE RATE	REPL. COST NEW	AYB	EYB	ECON	FNCT		NORM	% COND
0900	01	3,316	96.4022	127.25	421,961	2006	2006	0	0	0	9.00	91.00

1 SNGL FAM – 100% - 2007 Heated Area: 2856 HX Base Yr 2007

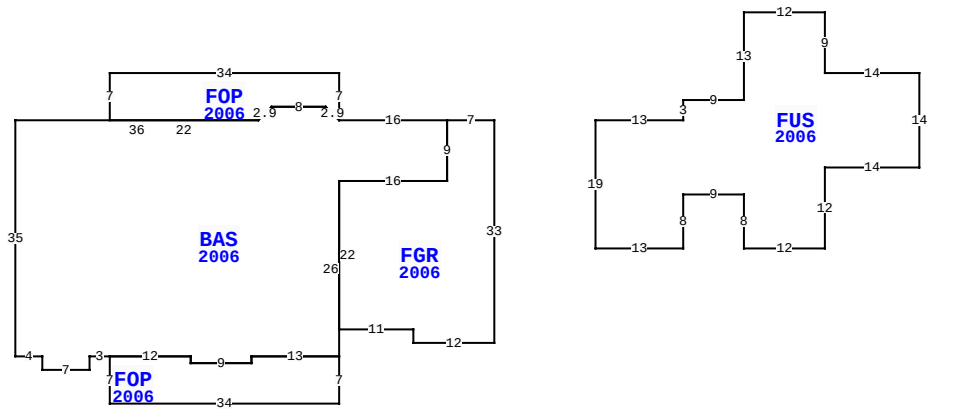

273939 MURRHEE RD, HILLIARD

BLD DATE		LGL DATE	
XF DATE		LAND DATE	05/07/2025 MLU
INC DATE		AG DATE	

NASSAU COUNTY PROPERTY — VALUATION SUMMARY

VALUATION BY		STANDARD
Tax Group: 4	Tax Dist:	
BUILDING MARKET VALUE		383,985
TOTAL MARKET OB/XF VALUE		41,900
TOTAL LAND VALUE - MARKET		72,800
TOTAL MARKET VALUE		498,685
SOH/AGL Deduction		255,066
ASSESSED VALUE		243,619
TOTAL EXEMPTION VALUE	HX HB	50,722
BASE TAXABLE VALUE		192,897
TOTAL JUST VALUE		498,685
NCON VALUE		0
INCOME VALUE		
PREVIOUS YEAR MKT VALUE		470,742

PERMIT NUM	DESCRIPTION	AMT	ISSUED
B21512	ABOVE GROUND POOL	2,800	06/01/2008
C15676	CO ISSUED	196,970	07/01/2005
B15522	FOUNDATION	17,000	07/01/2005
B15676	NEW CONSTR	196,970	07/01/2005

SALES DATA

OFF RECORD Number	DATE	TYPE INST	Q / U	V / I	RSN CD	SALE PRICE
2087/1614	9/13/2016	WD	U	I	11	100
GRANTOR: LEE H W & COLLEEN DIC						
GRANTEE: LEE JEFFREY A & ANG						
1322/1892	6/06/2005	WD	Q	V	01	100
GRANTOR: LEE JEFFREY A & H W						
GRANTEE: LEE JEFFREY A & ANG						

BUILDING NOTES

BUILDING DIMENSIONS

FGR=[YR=2006] W7 BAS=[YR=2006] W16 FOP=[YR=2006] N7 W34 S7 E22 R2 U2 E8 D2 R2 $ L2 U2 W8 D2 L2 W36 S35 E4 S2 E7 N2 E3 FOP=[YR=2006] S7 E34 N7 W13 S1 W9 N1 W12$ E12 S1 E9 N1 E13 N26 E16 N9$ S9 W16 S22 E11 S2 E12 N33$ PTR=E15 FUS=[YR=2006] E13 N3 E9 N13 E12 S9 E14 S14 W14 S12 W12 N8 W9 S8 W13 N19$ W15$.

EXTRA FEATURES

LN	OB/XF CODE	DESCRIPTION	BLD	CAP	L	W	UNITS	UT	Adj R	ADJ UNIT PRICE	ORIG COND	YEAR ON	YEAR ACTUAL	Q	% COND	OB/XF MKT VALUE	NOTES
1	0812	CONCRETE C	0	100	0	0	4,308.00	SF	4.00	4.00	100	2006	2006	3	86	14,820	
2	0825	BRICK	0	100	0	0	50.00	SF	12.50	12.50	100	2006	2006	3	96	600	
3	0510	GARAGE WD-	0	100	20	20	400.00	SF	35.00	35.00	100	2017	2017	3	81	11,340	
4	0810	CONCRETE A	0	100	0	0	250.00	SF	6.50	6.50	100	2017	2017	3	96	1,560	
5	0855	CONC PAVER	0	100	0	0	1,400.00	SF	10.00	10.00	100	2019	2019	3	97	13,580	

LAND DESCRIPTION

TOTAL OB/XF 41,900

LN	USE CODE	CLS	LAND USE DESCRIPTION	CAP	RD	LOC ZONE	FRONT	DEPTH	TOT LND UTS	UNIT TYPE	DT	DPTH FACT	% COND	TOT ADJ	UNIT PRICE	ADJ UNIT PRICE	LAND VALUE	OTHER ADJUSTMENTS AND NOTES	YEAR	DENSITY	DECL	FRZ	YR	CONSRV
1	000100	C	RES	100	0006	OR	0.00	0.00	2.08	AC		1.00	1.00	1.00	35,000.00	35,000.00	72,800							

REVIEW DATE 03/25/2024 BY WWA Total Acres: 2.08 Total Land Value: 72,800 Market: 0 Agricultural: 0 Common: 72,800 PRINTED 07/30/2025 BY SYS