IN OR 799 PG 1181
ESMT IN OR 2675-875

BAILEY AARON T/JONES EMILY R
45125 HERITAGE PLACE
CALLAHAN, FL 32011

2025

16-2N-25-0000-0008-0010

BUILDING CHARACTERISTICS

ELEMENT	CD	CONSTRUCTION
Exterior Wall	19	COMMON BRK 60
Exterior Wall	31	HARDIE BRD 40
Roof Structur	03	GABLE/HIP 100
Roof Cover	03	COMP SHNGL 100
Interior Wall	05	DRYWALL 100
Interior Floo	13	LVT/LAMNT 90
Interior Floo	11	CLAY TILE 10
Air Condition	03	CENTRAL 100
Heating Type	04	AIR DUCTED 100
Bedrooms		4 100
Bathrooms		3 100
Frame	02	WOOD FRAME 100
Stories	1.	1. 100
Units		0 100
BUD8 Adjustme	06	DIST 1D 100
Occupancy	00	NONE 100
Quality	04	Quality Level 04
DOR CODE	0100	SINGLE FAMILY
MAP NUM		MKT AREA 08
NEIGHBORHOOD/LOC	8026.00	

AREA TYPE	TOTAL GROSS AREA	PCT OF BASE	YEAR	TOT ADJ AREA	SUBAREA MARKET VALUE
BAS	1,758	100	1993	1,758	215,418
BAS	198	100	2004	198	24,262
BAS	559	100	2024	559	68,497
FCP	624	25	2024	156	19,115
FGR	576	55	2024	317	38,844
FOP	267	30	1993	80	9,803
FOP	27	30	2024	8	980
FOP	264	30	2024	79	9,680
FST	45	55	2024	25	3,063
TOTALS	4,318			3,180	389,664

MARKET ADJUSTMENTS

TYPE	MDL	EFF. AREA	TOT ADJ PTS	EFF. BASE RATE	REPL. COST NEW	AYB	EYB	ECON	FNCT		NORM	% COND
0900	01	3,180	116.4030	153.65	488,607	1985	1995	0	0	0	20.25	79.75

1 SNGL FAM – 100% - 2000 Heated Area: 2515 HX Base Yr 2000

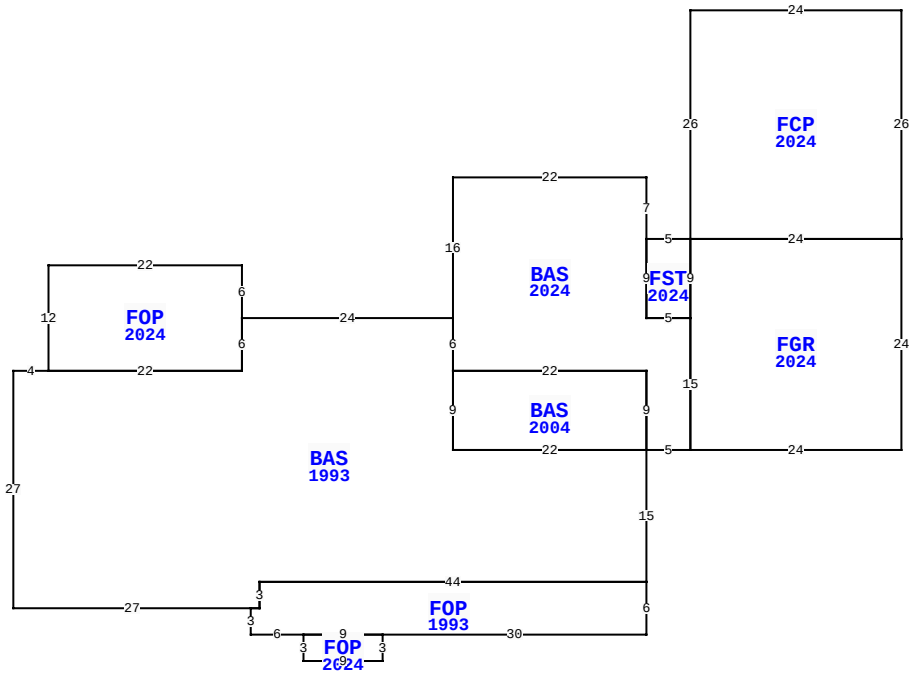

45125 HERITAGE PL, CALLAHAN

BLD DATE		LGL DATE	
XF DATE		LAND DATE	05/21/2025 MLU
INC DATE		AG DATE	

EXTRA FEATURES

LN	OB/XF CODE	DESCRIPTION	BLD	CAP	L	W	UNITS	UT	Adj R	ADJ UNIT PRICE	ORIG COND	YEAR ON	YEAR ACTUAL	Q	% COND	OB/XF MKT VALUE	NOTES
1	0500	FP-PRE FAB	0	100	0	0	1.00	UT	3,500.00	3,500.00	100	1985	1985	3	56	1,960	
2	0811	CONCRETE B	0	100	0	0	1,574.00	SF	5.20	5.20	100	2025	2024		100	8,185	
3	0861	POOL GUNIT	0	100	0	0	650.00	SF	85.00	85.00	100	2025	2024		100	55,250	
4	0855	CONC PAVER	0	100	0	0	1,496.00	SF	10.00	10.00	100	2025	2024		100	14,960	
5	0462	ST/AL FNC	0	100	0	0	456.00	SF	10.00	10.00	100	2025	2024		100	4,560	
6	0463	FENCE GATE	0	100	0	0	3.00	UT	300.00	300.00	100	2025	2024		100	900	

NASSAU COUNTY PROPERTY

VALUATION SUMMARY

VALUATION BY		STANDARD
Tax Group: 6	Tax Dist:	
BUILDING MARKET VALUE		425,873
TOTAL MARKET OB/XF VALUE		85,815
TOTAL LAND VALUE - MARKET		74,700
TOTAL MARKET VALUE		586,388
SOH/AGL Deduction		242,418
ASSESSED VALUE		343,970
TOTAL EXEMPTION VALUE	HX HB	50,722
BASE TAXABLE VALUE		293,248
TOTAL JUST VALUE		586,388
NCON VALUE		83,855
INCOME VALUE		
PREVIOUS YEAR MKT VALUE		449,526

PERMIT NUM	DESCRIPTION	AMT	ISSUED
B23-05050	ADDITION	121,252	04/19/2023
B23-05049	SWIM POOL	80,000	03/23/2023
E20943	ELEC OTHER	1,500	06/01/2008
R10827	REPAIR/RRF	3,000	11/01/2007
B20723	XFOB	13,500	11/01/2007
B13155	GARAGE	19,308	07/01/2004

SALES DATA

OFF RECORD Number	DATE	TYPE INST	Q / U	V / I	RSN CD	SALE PRICE
0799/1181	7/14/1997	WD	Q	I		94,000
GRANTOR: JONES GREGORY S & WIL						
GRANTEE: BAILEY AARON & EMIL						
0799/1178	7/14/1997	WD	U	I	10	7,800
GRANTOR: JONES LOUELLA						
GRANTEE: JONES GREGORY & WIL						

BUILDING NOTES

BUILDING DIMENSIONS

BAS=[YR=1993;ORIG=-51,14] N6 W24 S6 W22 W4 S27 E27 E1 N3 E44 N15 W22 N9 $
FGR=[YR=2024;ORIG=0,-1] W24 S9 S15 E24 N24 $
FOP=[YR=1993;ORIG=-74,41] S3 E6 E9 E30 N6 W44 S3 W1 $
FOP=[YR=2024;ORIG=-75,2] S6 S6 W22 N12 E22 $
BAS=[YR=2004;ORIG=-29,14] W22 S9 E22 N9 $
FOP=[YR=2024;ORIG=-68,47] N3 E9 S3 W9 $
BAS=[YR=2024;ORIG=-51,-8] S16 S6 E22 S9 E5 N15 W5 N9 N7 W22 $
FST=[YR=2024;ORIG=-24,8] W5 N9 E5 S9 $
FCP=[YR=2024;ORIG=-24,-1] E24 N26 W24 S26 $
.

LAND DESCRIPTION

TOTAL OB/XF 85,815

LN	USE CODE	CLS	LAND USE DESCRIPTION	CAP	RD	LOC ZONE	FRONT	DEPTH	TOT LND UTS	UNIT TYPE	DT	DPTH FACT	% COND	TOT ADJ	UNIT PRICE	ADJ UNIT PRICE	LAND VALUE	OTHER ADJUSTMENTS AND NOTES	YEAR	DENSITY	DECL	FRZ	YR	CONSRV
1	000100	C	RES	100		OR	0.00	0.00	1.66	AC		1.00	1.00	1.00	45,000.00	45,000.00	74,700							

REVIEW DATE 05/16/2024 BY TW Total Acres: 1.66 Total Land Value: 74,700 Market: 0 Agricultural: 0 Common: 74,700 PRINTED 07/30/2025 BY SYS

IN OR 799 PG 1181
ESMT IN OR 2675-875

BAILEY AARON T/JONES EMILY R
45125 HERITAGE PLACE
CALLAHAN, FL 32011

2025

16-2N-25-0000-0008-0010

BUILDING CHARACTERISTICS

ELEMENT	CD	CONSTRUCTION
Exterior Wall	30	VINYL 100
Roof Structur	03	GABLE/HIP 100
Roof Cover	12	MODULAR MT 100
Interior Wall	07	NONE 100
Interior Floo	03	CONC FINSH 100
Air Condition	01	NONE 100
Heating Type	01	NONE 100
Bedrooms		0 100
Bathrooms		0 100
Frame	02	WOOD FRAME 100
Stories	1.	1. 100
Units		0 100
Occupancy	00	NONE 100
Quality	06	Quality Level 06

DOR CODE	0100	SINGLE FAMILY	
MAP NUM		MKT AREA	08
NEIGHBORHOOD/LOC	8026.00		

AREA TYPE	TOTAL GROSS AREA	PCT OF BASE	YEAR	TOT ADJ AREA	SUBAREA MARKET VALUE
BAS	1,500	100	2007	1,500	26,162
BAS	576	100	2022	576	10,047
TOTALS	2,076			2,076	36,209

MARKET ADJUSTMENTS

TYPE	MDL	EFF. AREA	TOT ADJ PTS	EFF. BASE RATE	REPL. COST NEW	AYB	EYB	ECON	FNCT		NORM	% COND
6500	01	2,076	57.4770	21.27	44,157	2007	2010	0	0	0	18.00	82.00

2 GARAGE RES – 100% - 2000 Heated Area: 2076 HX Base Yr 2000

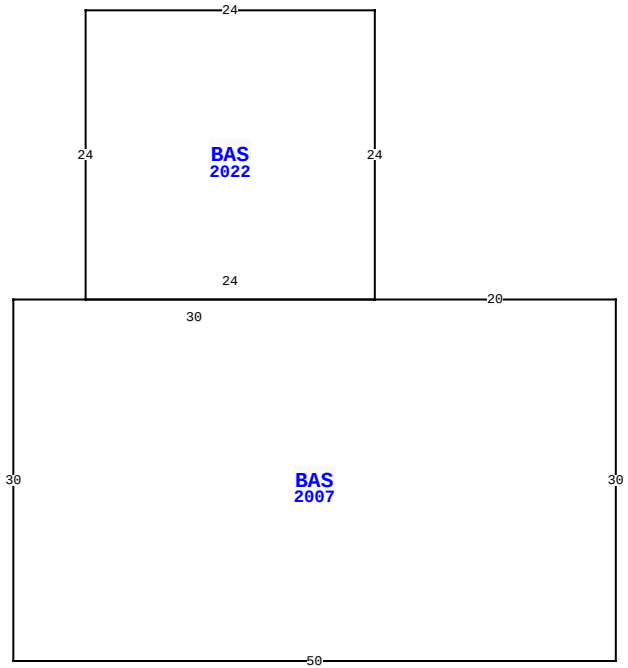

45125 HERITAGE PL, CALLAHAN

BLD DATE		LGL DATE	
XF DATE		LAND DATE	05/21/2025 MLU
INC DATE		AG DATE	

NASSAU COUNTY PROPERTY

PAGE 2 of 2 6

VALUATION SUMMARY

VALUATION BY		STANDARD
Tax Group: 6	Tax Dist:	
BUILDING MARKET VALUE		425,873
TOTAL MARKET OB/XF VALUE		85,815
TOTAL LAND VALUE - MARKET		74,700
TOTAL MARKET VALUE		586,388
SOH/AGL Deduction		242,418
ASSESSED VALUE		343,970
TOTAL EXEMPTION VALUE	HX HB	50,722
BASE TAXABLE VALUE		293,248
TOTAL JUST VALUE		586,388
NCON VALUE		83,855
INCOME VALUE		
PREVIOUS YEAR MKT VALUE		449,526

PERMIT NUM	DESCRIPTION	AMT	ISSUED
R6377	REPAIR/RRF	800	07/01/2004

SALES DATA

OFF RECORD Number	DATE	TYPE INST	Q / U	V / I	RSN CD	SALE PRICE
0799/1181	7/14/1997	WD	Q	I		94,000
GRANTOR: JONES GREGORY S & WIL						
GRANTEE: BAILEY AARON & EMIL						
0799/1178	7/14/1997	WD	U	I	10	7,800
GRANTOR: JONES LOUELLA						
GRANTEE: JONES GREGORY & WIL						

BUILDING NOTES

BUILDING DIMENSIONS

BAS=[YR=2007] W20 BAS=[YR=2022] N24 W24 S24 E24$ W30 S30 E50 N30$.

EXTRA FEATURES

L N	OB/XF CODE	DESCRIPTION	BLD	CAP	L	W	UNITS	UT	Adj R	ADJ UNIT PRICE	ORIG COND	YEAR ON	YEAR ACTUAL	Q	% COND	OB/XF MKT VALUE	NOTES

LAND DESCRIPTION

TOTAL OB/XF 0

L N	USE CODE	CLS	LAND USE DESCRIPTION	CAP	R D	LOC ZONE	FRONT	DEPTH	TOT LND UTS	UNIT TYPE	D T	DPTH FACT	% COND	TOT ADJ	UNIT PRICE	ADJ UNIT PRICE	LAND VALUE	OTHER ADJUSTMENTS AND NOTES	YEAR	DENSITY	DECL	FRZ	YR	CONSRV

REVIEW DATE 05/16/2024 BY TW Total Acres: 1.66 Total Land Value: 74,700 Market: 0 Agricultural: 0 Common: 74,700 PRINTED 07/30/2025 BY SYS