PT OF SE1/4
IN OR 547/943
ESMT OR 1188/927

CREWS BARBARA E
44003 KOREYS LANE
CALLAHAN, FL 32011

2025

16-1N-25-0000-0012-0040

NASSAU COUNTY PROPERTY

BUILDING CHARACTERISTICS

ELEMENT	CD	CONSTRUCTION
Exterior Wall	05	AVERAGE 100
Roof Structur	03	GABLE/HIP 100
Roof Cover	03	COMP SHNGL 100
Interior Wall	05	DRYWALL 100
Interior Floo	14	CARPET 90
Interior Floo	08	SHT VINYL 10
Air Condition	01	NONE 100
Heating Type	02	CONVECTION 100
Bedrooms		2 100
Bathrooms		1 100
Frame	02	WOOD FRAME 100
Stories	1.	1. 100
Units		0 100
BUD8 Adjustme	06	DIST 1D 100
Occupancy	00	NONE 100
Quality	03	Quality Level 03

DOR CODE 0100 SINGLE FAMILY
MAP NUM | MKT AREA 08
NEIGHBORHOOD/LOC 8005.00

AREA TYPE	TOTAL GROSS AREA	PCT OF BASE	YEAR	TOT ADJ AREA	SUBAREA MARKET VALUE
BAS	840	100	1993	840	35,590
BAS	140	100	2002	140	5,932
FEP	180	80	2002	144	6,101
UCP	720	20	2002	144	6,101
UOP	254	20	2024	51	2,161
USP	224	30	2002	67	2,839
UST	49	45	2002	22	932
TOTALS	2,407			1,408	59,656

MARKET ADJUSTMENTS

TYPE	MDL	EFF. AREA	TOT ADJ PTS	EFF. BASE RATE	REPL. COST NEW	AYB	EYB	ECON	FNCT		NORM	% COND
0100	01	1,408	100.8800	100.88	142,039	1981	1981	40	0	0	18.00	42.00

1 SINGLE FAM – 100% - 0 Heated Area: 980 HX Base Yr

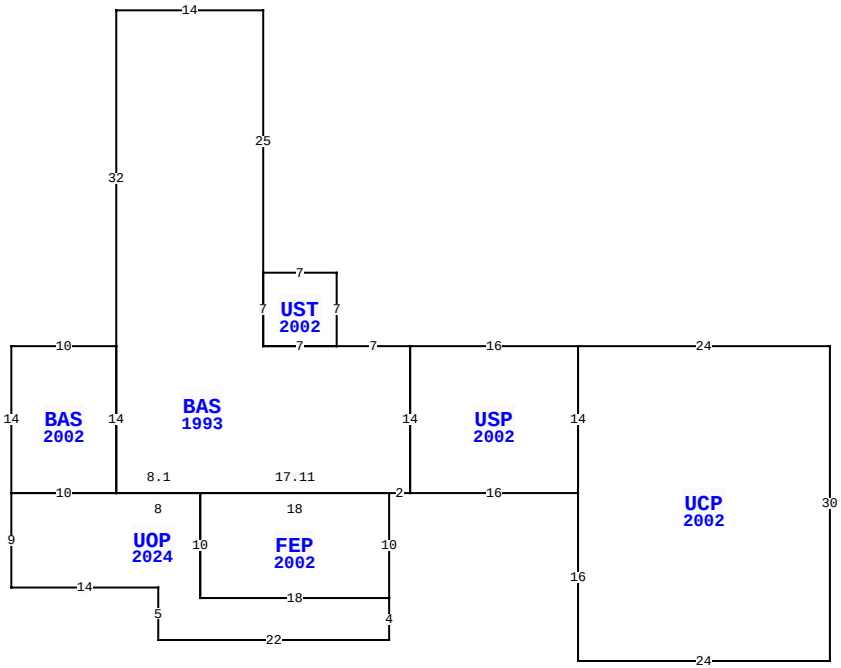

44003 KOREYS LN, CALLAHAN

BLD DATE		LGL DATE	
XF DATE		LAND DATE	05/09/2025 MLU
INC DATE		AG DATE	

VALUATION SUMMARY

VALUATION BY		STANDARD
Tax Group: 6	Tax Dist:	
BUILDING MARKET VALUE		81,774
TOTAL MARKET OB/XF VALUE		11,283
TOTAL LAND VALUE - MARKET		70,000
TOTAL MARKET VALUE		163,057
SOH/AGL Deduction		88,106
ASSESSED VALUE		74,951
TOTAL EXEMPTION VALUE	HX HB WX	37,340
BASE TAXABLE VALUE		37,611
TOTAL JUST VALUE		163,057
NCON VALUE		0
INCOME VALUE		
PREVIOUS YEAR MKT VALUE		157,736

PERMIT NUM	DESCRIPTION	AMT	ISSUED
7530	MH MOVE-ON	17,733	10/20/1988

SALES DATA

OFF RECORD Number	DATE	TYPE INST	Q U	V I	RSN CD	SALE PRICE
0547/0943	7/14/1988	WD	Q	I		35,100

GRANTOR: HENDRICKS JW
GRANTEE: CREWS EDWIN H

BUILDING NOTES

BUILDING DIMENSIONS

BAS=[YR=1993;ORIG=-40,0] W7 W7 N7 N25 W14 S32 S14 E8.1 E17.11 E2 N14 $
UCP=[YR=2002;ORIG=0,0] W24 S14 S16 E24 N30 $
USP=[YR=2002;ORIG=-24,0] W16 S14 E16 N14 $
FEP=[YR=2002;ORIG=-60,14] S10 E18 N10 W18 $
BAS=[YR=2002;ORIG=-68,0] W10 S14 E10 N14 $
UST=[YR=2002;ORIG=-47,0] N7 W7 S7 E7 $
UOP=[YR=2024;ORIG=-42,28] N4 W18 N10 W8 W10 S9 E14 S5 E22 $
.

EXTRA FEATURES

LN	OB/XF CODE	DESCRIPTION	BLD	CAP	L	W	UNITS	UT	Adj R	ADJ UNIT PRICE	ORIG COND	YEAR ON	YEAR ACTUAL	Q	% COND	OB/XF MKT VALUE	NOTES
1	0200	BARN WD 0-	0	100	30	40	1,200.00	SF	12.00	12.00	100	1983	1983	3	20	2,880	
2	0500	FP-PRE FAB	0	100	0	0	1.00	UT	3,500.00	3,500.00	100	1983	1983	3	51.5	1,803	
3	0681	POLE SHED	0	100	10	20	200.00	SF	15.00	15.00	100	1990	1990	3	20	600	
4	0936	SEPTC TANK	0	0	0	0	1.00	UT	6,000.00	6,000.00	100	1988	1988	3	100	6,000	

LAND DESCRIPTION

TOTAL OB/XF 11,283

LN	USE CODE	CLS	LAND USE DESCRIPTION	CAP	RD	LOC ZONE	FRONT	DEPTH	TOT LND UTS	UNIT TYPE	DT	DPTH FACT	% COND	TOT ADJ	UNIT PRICE	ADJ UNIT PRICE	LAND VALUE	OTHER ADJUSTMENTS AND NOTES	YEAR	DENSITY	DECL	FRZ	YR	CONSRV
1	000100	C	RES	100	0007	OR	0.00	0.00	2.00	AC		1.00	1.00	1.00	35,000.00	35,000.00	70,000							

REVIEW DATE 01/06/2023 BY KWA Total Acres: 2.00 Total Land Value: 70,000 Market: 0 Agricultural: 0 Common: 70,000 PRINTED 07/30/2025 BY SYS

PT OF SE1/4
IN OR 547/943
ESMT OR 1188/927

CREWS BARBARA E
44003 KOREYS LANE
CALLAHAN, FL 32011

2025

16-1N-25-0000-0012-0040

NASSAU COUNTY PROPERTY

BUILDING CHARACTERISTICS

ELEMENT	CD	CONSTRUCTION
Exterior Wall	25	MOD METAL 100
Roof Structur	03	GABLE/HIP 100
Roof Cover	01	MINIMUM 100
Interior Wall	04	PLYWOOD 100
Interior Floo	08	SHT VINYL 60
Interior Floo	14	CARPET 40
Air Condition	03	CENTRAL 100
Heating Type	04	AIR DUCTED 100
Bedrooms		2 100
Bathrooms		2 100
Frame	02	WOOD FRAME 100
Stories	1.	1. 100
Units		0 100
Quality	03	Quality Level 03

DOR CODE 0100 SINGLE FAMILY
MAP NUM | MKT AREA 08
NEIGHBORHOOD/LOC 8005.00

AREA TYPE	TOTAL GROSS AREA	PCT OF BASE	YEAR	TOT ADJ AREA	SUBAREA MARKET VALUE
BAS	924	100	2017	924	21,200
UOP	160	25	2024	40	918
TOTALS	1,084			964	22,118

MARKET ADJUSTMENTS

TYPE	MDL	EFF. AREA	TOT ADJ PTS	EFF. BASE RATE	REPL. COST NEW	AYB	EYB	ECON	FNCT		NORM	% COND
0820	02	964	95.6000	76.48	73,727	1989	1989	0	0	0	70.00	30.00

2 M/H 93- – 0% - 0 Heated Area: 924 HX Base Yr

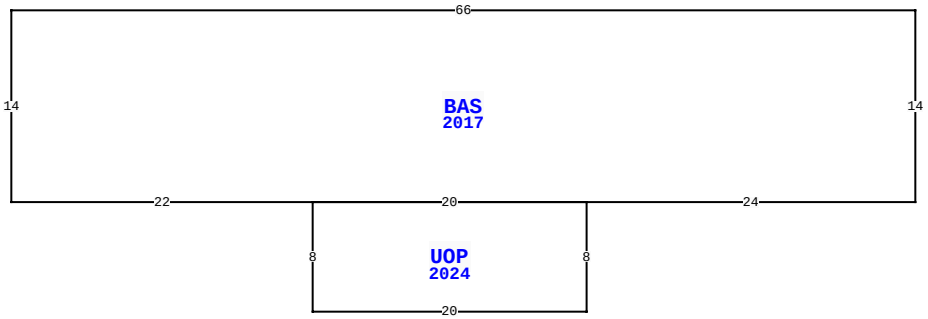

44003 KOREYS LN, CALLAHAN

BLD DATE		LGL DATE	
XF DATE		LAND DATE	05/09/2025 MLU
INC DATE		AG DATE	

VALUATION SUMMARY

VALUATION BY		STANDARD
Tax Group: 6	Tax Dist:	
BUILDING MARKET VALUE		81,774
TOTAL MARKET OB/XF VALUE		11,283
TOTAL LAND VALUE - MARKET		70,000
TOTAL MARKET VALUE		163,057
SOH/AGL Deduction		88,106
ASSESSED VALUE		74,951
TOTAL EXEMPTION VALUE	HX HB WX	37,340
BASE TAXABLE VALUE		37,611
TOTAL JUST VALUE		163,057
NCON VALUE		0
INCOME VALUE		
PREVIOUS YEAR MKT VALUE		157,736

PERMIT NUM	DESCRIPTION	AMT	ISSUED

SALES DATA

OFF RECORD Number	DATE	TYPE INST	Q / U	V / I	RSN CD	SALE PRICE
0547/0943	7/14/1988	WD	Q	I		35,100

GRANTOR: HENDRICKS JW
GRANTEE: CREWS EDWIN H

BUILDING NOTES

BUILDING DIMENSIONS

BAS=[YR=2017;ORIG=0,0] W66 S14 E22 E20 E24 N14 $
UOP=[YR=2024;ORIG=-24,14] W20 S8 E20 N8 $
.

EXTRA FEATURES

L N	OB/XF CODE	DESCRIPTION	BLD	CAP	L	W	UNITS	UT	Adj R	ADJ UNIT PRICE	ORIG COND	YEAR ON	YEAR ACTUAL	Q	% COND	OB/XF MKT VALUE	NOTES

LAND DESCRIPTION

TOTAL OB/XF 0

L N	USE CODE	CLS	LAND USE DESCRIPTION	CAP	R D	LOC ZONE	FRONT	DEPTH	TOT LND UTS	UNIT TYPE	D T	DPTH FACT	% COND	TOT ADJ	UNIT PRICE	ADJ UNIT PRICE	LAND VALUE	OTHER ADJUSTMENTS AND NOTES	YEAR	DENSITY	DECL	FRZ	YR	CONSRV

REVIEW DATE 01/06/2023 BY KWA Total Acres: 2.00 Total Land Value: 70,000 Market: 0 Agricultural: 0 Common: 70,000 PRINTED 07/30/2025 BY SYS