PT SEC 16-1N-25E IN OR 966/1819
OR 2540/1072 R/W PT OR 1057/1129
ESMT OR 1123/1406 & OR 1197/1813

TISON TRAVIS C & ZANDRA
43674 RATLIFF ROAD
CALLAHAN, FL 32011

2025

16-1N-25-0000-0005-0060

BUILDING CHARACTERISTICS

ELEMENT	CD	CONSTRUCTION
Exterior Wall	20	FACE BRICK 100
Roof Structur	03	GABLE/HIP 100
Roof Cover	03	COMP SHNGL 100
Interior Wall	05	DRYWALL 100
Interior Floo	11	CLAY TILE 60
Interior Floo	14	CARPET 40
Air Condition	03	CENTRAL 100
Heating Type	04	AIR DUCTED 100
Bedrooms		4 100
Bathrooms		2.5 100
Frame	02	WOOD FRAME 100
Stories	1.	1. 100
Units		0 100
Occupancy	00	NONE 100
Quality	03	Quality Level 03

DOR CODE 0100 SINGLE FAMILY
MAP NUM | MKT AREA 08
NEIGHBORHOOD/LOC 8026.00

AREA TYPE	TOTAL GROSS AREA	PCT OF BASE	YEAR	TOT ADJ AREA	SUBAREA MARKET VALUE
BAS	2,080	100	2003	2,080	248,560
FGR	600	55	2003	330	39,435
FOP	272	30	2003	82	9,799
FOP	304	30	2003	91	10,874
STP	40	10	2004	4	478
STP	56	10	2004	6	717
UDG	625	55	2003	344	41,108
UST	250	45	2024	112	13,384
TOTALS	4,227			3,049	364,356

MARKET ADJUSTMENTS

TYPE	MDL	EFF. AREA	TOT ADJ PTS	EFF. BASE RATE	REPL. COST NEW	AYB	EYB	ECON	FNCT		NORM	% COND
0900	01	3,049	107.4560	141.84	432,470	2003	2003	0	0	0	15.75	84.25

1 SNGL FAM – 100% - 2004 Heated Area: 2080 HX Base Yr 2004

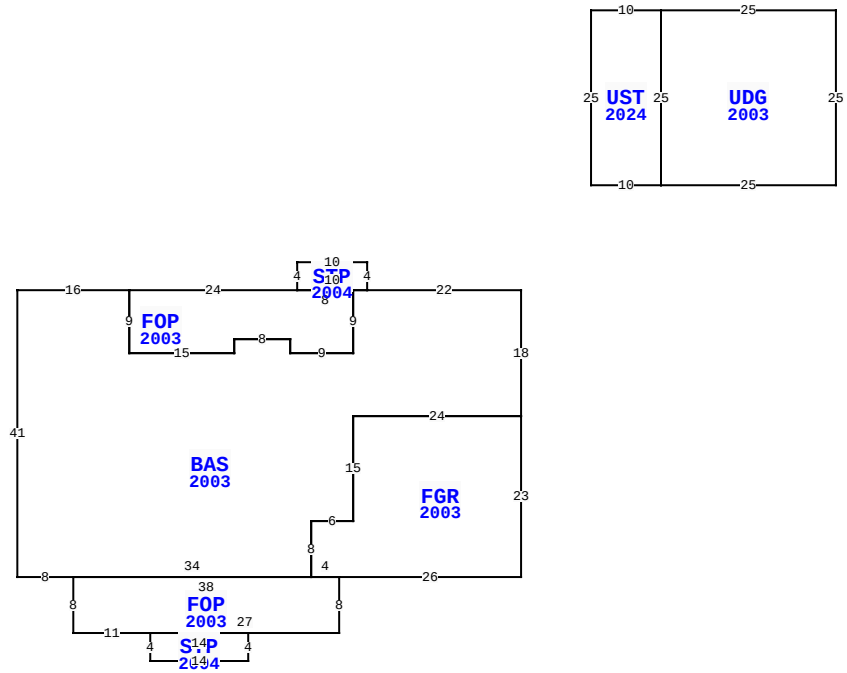

43674 RATLIFF RD, CALLAHAN

BLD DATE		LGL DATE	
XF DATE		LAND DATE	05/21/2025 MLU
INC DATE		AG DATE	

NASSAU COUNTY PROPERTY

PAGE 1 of 2 6

VALUATION SUMMARY

VALUATION BY		STANDARD
Tax Group: 6	Tax Dist:	
BUILDING MARKET VALUE		384,593
TOTAL MARKET OB/XF VALUE		6,681
TOTAL LAND VALUE - MARKET		133,900
TOTAL MARKET VALUE		525,174
SOH/AGL Deduction		257,913
ASSESSED VALUE		267,261
TOTAL EXEMPTION VALUE	HX HB	50,722
BASE TAXABLE VALUE		216,539
TOTAL JUST VALUE		525,174
NCON VALUE		0
INCOME VALUE		
PREVIOUS YEAR MKT VALUE		495,816

DORMERS ARE DECORATIVE
DOGS!

PERMIT NUM	DESCRIPTION	AMT	ISSUED
B23-11457	BARN (30X31)	61,826	09/08/2023
B10810	NEW CONSTR	137,074	02/01/2002
B10811	GARAGE	19,239	02/01/2002
R4825	REPAIR/RRF	5,000	02/01/2002
R4824	REPAIR/RRF	1,000	02/01/2002

SALES DATA

OFF RECORD Number	DATE	TYPE INST	Q U	V I	RSN CD	SALE PRICE
2540/1072	2/18/2022	QC	U	V	11	100
GRANTOR: CLINE DANA						
GRANTEE: TISON TRAVIS C & ZA						
0966/1819	1/17/2001	QC	Q	V	01	100
GRANTOR: TISON LAWRENCE M						
GRANTEE: TISON TRAVIS & ZAND						

BUILDING NOTES

BUILDING DIMENSIONS

BAS=[YR=2003;ORIG=0,0] W22 W2 S9 W9 N2 W8 S2 W15 N9 W16 S41 E8 E34 N8 E6 N15 E24 N18 $
UDG=[YR=2003;ORIG=20,-40] E25 S25 W25 N25 $
FGR=[YR=2003;ORIG=-26,41] E26 N23 W24 S15 W6 S8 E4 $
FOP=[YR=2003;ORIG=-64,41] S8 E11 E27 N8 W38 $
FOP=[YR=2003;ORIG=-32,0] W24 S9 E15 N2 E8 S2 E9 N9 W8 $
STP=[YR=2004;ORIG=-53,49] S4 E14 N4 W14 $
STP=[YR=2004;ORIG=-22,0] N4 W10 S4 E10 $
UST=[YR=2024;ORIG=20,-40] W10 S25 E10 N25 $
.

EXTRA FEATURES

LN	OB/XF CODE	DESCRIPTION	BLD	CAP	L	W	UNITS	UT	Adj R	ADJ UNIT PRICE	ORIG COND	YEAR ON	YEAR ACTUAL	Q	% COND	OB/XF MKT VALUE	NOTES
1	0812	CONCRETE C	0	100	0	0	2,037.00	SF	4.00	4.00	100	2003	2003	3	82	6,681	

LAND DESCRIPTION

TOTAL OB/XF 6,681

LN	USE CODE	CLS	LAND USE DESCRIPTION	CAP	RD	LOC ZONE	FRONT	DEPTH	TOT LND UTS	UNIT TYPE	DT	DPTH FACT	% COND	TOT ADJ	UNIT PRICE	ADJ UNIT PRICE	LAND VALUE	OTHER ADJUSTMENTS AND NOTES	YEAR	DENSITY	DECL	FRZ	YR	CONSRV
1	000100	C	RES	100	0006	OR	0.00	0.00	2.27	AC		1.00	1.00	1.00	35,000.00	35,000.00	79,450							
2	000100	C	RES	100		OR	0.00	0.00	1.21	AC		1.00	1.00	1.00	45,000.00	45,000.00	54,450							

REVIEW DATE 12/21/2023 BY KW Total Acres: 3.48 Total Land Value: 133,900 Market: 0 Agricultural: 0 Common: 133,900 PRINTED 07/30/2025 BY SYS

PT SEC 16-1N-25E IN OR 966/1819
OR 2540/1072 R/W PT OR 1057/1129
ESMT OR 1123/1406 & OR 1197/1813

TISON TRAVIS C & ZANDRA
43674 RATLIFF ROAD
CALLAHAN, FL 32011

2025

16-1N-25-0000-0005-0060

BUILDING CHARACTERISTICS

ELEMENT	CD	CONSTRUCTION
Exterior Wall	25	MOD METAL 100
Roof Structur	10	STEEL FRME 100
Roof Cover	12	MODULAR MT 100
Interior Wall	07	NONE 100
Interior Floo	03	CONC FINSH 100
Air Condition	01	NONE 100
Heating Type	01	NONE 100
Bedrooms		0 100
Bathrooms		0 100
Frame	05	STEEL 100
Quality	05	Quality Level 05
DOR CODE	0100	SINGLE FAMILY
MAP NUM		MKT AREA 08
NEIGHBORHOOD/LOC	8026.00	

AREA TYPE	TOTAL GROSS AREA	PCT OF BASE	YEAR	TOT ADJ AREA	SUBAREA MARKET VALUE
BAS	930	100	2024	930	20,237
TOTALS	930			930	20,237

MARKET ADJUSTMENTS

TYPE	MDL	EFF. AREA	TOT ADJ PTS	EFF. BASE RATE	REPL. COST NEW	AYB	EYB	ECON	FNCT		NORM	% COND
6500	01	930	59.4000	21.98	20,441	2023	2023	0	0	0	1.00	99.00

2 GARAGE RES – 100% - 2024 Heated Area: 930 HX Base Yr 2004

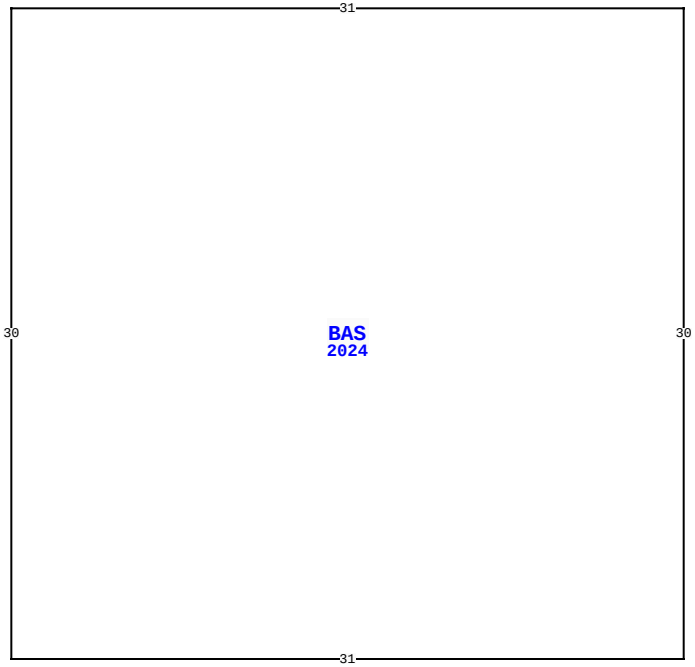

43674 RATLIFF RD, CALLAHAN

BLD DATE		LGL DATE	
XF DATE		LAND DATE	05/21/2025 MLU
INC DATE		AG DATE	

NASSAU COUNTY PROPERTY

PAGE 2 of 2 6

VALUATION SUMMARY

VALUATION BY		STANDARD
Tax Group: 6	Tax Dist:	
BUILDING MARKET VALUE		384,593
TOTAL MARKET OB/XF VALUE		6,681
TOTAL LAND VALUE - MARKET		133,900
TOTAL MARKET VALUE		525,174
SOH/AGL Deduction		257,913
ASSESSED VALUE		267,261
TOTAL EXEMPTION VALUE	HX HB	50,722
BASE TAXABLE VALUE		216,539
TOTAL JUST VALUE		525,174
NCON VALUE		0
INCOME VALUE		
PREVIOUS YEAR MKT VALUE		495,816

PERMIT NUM	DESCRIPTION	AMT	ISSUED

SALES DATA

OFF RECORD Number	DATE	TYPE INST	Q / U	V / I	RSN CD	SALE PRICE
2540/1072	2/18/2022	QC	U	V	11	100
GRANTOR: CLINE DANA						
GRANTEE: TISON TRAVIS C & ZA						
0966/1819	1/17/2001	QC	Q	V	01	100
GRANTOR: TISON LAWRENCE M						
GRANTEE: TISON TRAVIS & ZAND						

BUILDING NOTES

BUILDING DIMENSIONS

BAS=[YR=2024;ORIG=50,10] E31 S30 W31 N30 $
.

EXTRA FEATURES

LN	OB/XF CODE	DESCRIPTION	BLD	CAP	L	W	UNITS	UT	Adj R	ADJ UNIT PRICE	ORIG COND	YEAR ON	YEAR ACTUAL	Q	% COND	OB/XF MKT VALUE	NOTES

LAND DESCRIPTION

TOTAL OB/XF 0

LN	USE CODE	CLS	LAND USE DESCRIPTION	CAP	RD	LOC ZONE	FRONT	DEPTH	TOT LND UTS	UNIT TYPE	DT	DPTH FACT	% COND	TOT ADJ	UNIT PRICE	ADJ UNIT PRICE	LAND VALUE	OTHER ADJUSTMENTS AND NOTES	YEAR	DENSITY	DECL	FRZ	YR	CONSRV

REVIEW DATE 12/21/2023 BY KW Total Acres: 3.48 Total Land Value: 133,900 Market: 0 Agricultural: 0 Common: 133,900 PRINTED 07/30/2025 BY SYS