LOT 71
TUPELO PLANTATION PB 7/206
ESMT IN OR 2658-1714

AKEL FRED C
33250 TUPELO LN
CALLAHAN, FL 32011

2025

16-1N-24-2090-0071-0000

NASSAU COUNTY PROPERTY

BUILDING CHARACTERISTICS

ELEMENT	CD	CONSTRUCTION
Exterior Wall	31	HARDIE BRD 90
Exterior Wall	20	FACE BRICK 10
Roof Structur	03	GABLE/HIP 100
Roof Cover	03	COMP SHNGL 100
Interior Wall	05	DRYWALL 100
Interior Floo	13	LVT/LAMNT 70
Interior Floo	14	CARPET 30
Air Condition	03	CENTRAL 100
Heating Type	04	AIR DUCTED 100
Bedrooms		3 100
Bathrooms		3 100
Frame	02	WOOD FRAME 100
Stories	1.5	1.5 100
Units		0 100
Quality	02	Quality Level 02
DOR CODE	0100	SINGLE FAMILY
MAP NUM		MKT AREA 09
NEIGHBORHOOD/LOC	9013.00	

AREA TYPE	TOTAL GROSS AREA	PCT OF BASE	YEAR	TOT ADJ AREA	SUBAREA MARKET VALUE
BAS	2,282	100	2025	2,282	355,467
FGR	422	55	2025	232	36,139
FOP	142	30	2025	43	6,698
FOP	270	30	2025	81	12,617
FST	33	55	2025	18	2,804
FST	42	55	2025	23	3,583
FUS	313	100	2025	313	48,756
STR	44	10	2025	4	623
TOTALS	3,548			2,996	466,687

MARKET ADJUSTMENTS

TYPE	MDL	EFF. AREA	TOT ADJ PTS	EFF. BASE RATE	REPL. COST NEW	AYB	EYB	ECON	FNCT		NORM	% COND
0500	01	2,996	98.5872	155.77	466,687	2024	2024	0	0	0	0.00	100.00

1 SFR CUST – 100% - 2025 Heated Area: 2595 HX Base Yr 2025

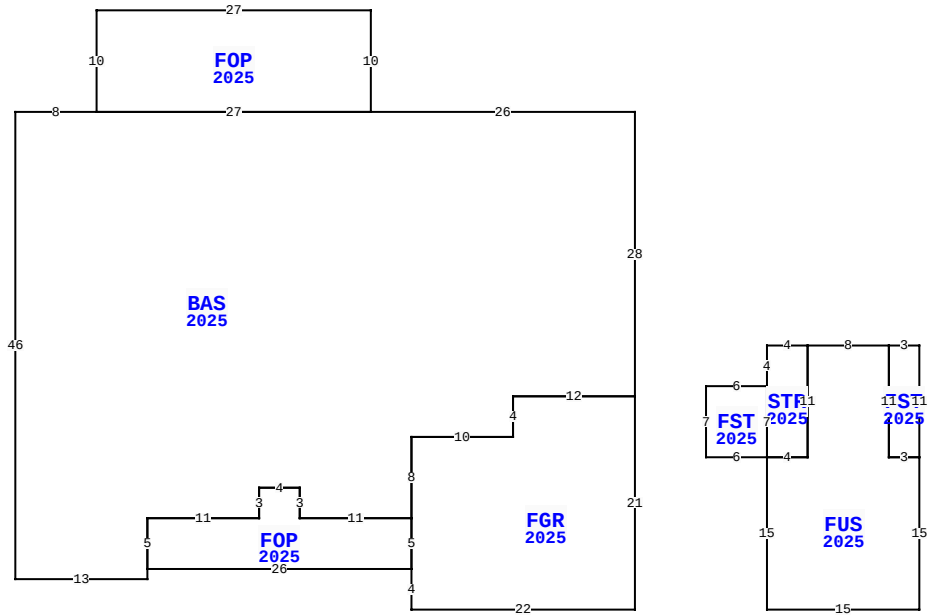

33250 TUPELO LN, CALLAHAN

BLD DATE		LGL DATE	
XF DATE		LAND DATE	05/07/2025 MLU
INC DATE		AG DATE	

VALUATION SUMMARY

VALUATION BY		STANDARD
Tax Group: 6	Tax Dist:	
BUILDING MARKET VALUE		492,807
TOTAL MARKET OB/XF VALUE		6,230
TOTAL LAND VALUE - MARKET		190,440
TOTAL MARKET VALUE		689,477
SOH/AGL Deduction		0
ASSESSED VALUE		689,477
TOTAL EXEMPTION VALUE	HX HB	50,722
BASE TAXABLE VALUE		638,755
TOTAL JUST VALUE		689,477
NCON VALUE		499,037
INCOME VALUE		
PREVIOUS YEAR MKT VALUE		156,600

PERMIT NUM	DESCRIPTION	AMT	ISSUED
B240006354	26 X 45 DETACHED	75,102	05/29/2024
CO240002802	PRIVATE PROVIDER	402,240	03/12/2024
22018779	NEW CONSTR	402,240	12/21/2022

SALES DATA

OFF RECORD Number	DATE	TYPE INST	Q / U	V / I	RSN CD	SALE PRICE
2426/0338	1/19/2021	WD	Q	V	01	82,000
GRANTOR: MCKENZIE JAY						
GRANTEE: AKEL FRED C						
2144/0244	8/21/2017	TD	U	V	11	62,000
GRANTOR: 33250 TRUST & ELIAS R						
GRANTEE: MCKENZIE JAY						

BUILDING NOTES

BUILDING DIMENSIONS

BAS=[YR=2025;ORIG=91,4] W26 W27 W8 S46 E13 N1 N5 E11 N3 E4 S3 E11 N8 E10 N4 E12 N28 $
FGR=[YR=2025;ORIG=79,36] W10 S8 S5 S4 E22 N21 W12 S4 $
FOP=[YR=2025;ORIG=38,-6] E27 S10 W27 N10 $
FOP=[YR=2025;ORIG=43,44] E11 N3 E4 S3 E11 S5 W26 N5 $
STR=[YR=2025;ORIG=104,27] E4 S11 W4 N7 N4 $
FST=[YR=2025;ORIG=98,38] E6 N7 W6 S7 $
FST=[YR=2025;ORIG=116,27] S11 E3 N11 W3 $
FUS=[YR=2025;ORIG=116,27] W8 S11 W4 S15 E15 N15 W3 N11 $
.

EXTRA FEATURES

LN	OB/XF CODE	DESCRIPTION	BLD	CAP	L	W	UNITS	UT	Adj R	ADJ UNIT PRICE	ORIG COND	YEAR ON	YEAR ACTUAL	Q	% COND	OB/XF MKT VALUE	NOTES
1	0810	CONCRETE A	0	100	0	0	420.00	SF	6.50	6.50	100	2025	2024		100	2,730	
2	0500	FP-PRE FAB	0	100	0	0	1.00	UT	3,500.00	3,500.00	100	2025	2024		100	3,500	

LAND DESCRIPTION

TOTAL OB/XF 6,230

LN	USE CODE	CLS	LAND USE DESCRIPTION	CAP	RD	LOC ZONE	FRONT	DEPTH	TOT LND UTS	UNIT TYPE	DT	DPTH FACT	% COND	TOT ADJ	UNIT PRICE	ADJ UNIT PRICE	LAND VALUE	OTHER ADJUSTMENTS AND NOTES	YEAR	DENSITY	DECL	FRZ	YR	CONSRV
1	000100	C	RES	100		PUD	0.00	0.00	8.10	AC		1.00	1.00	1.00	22,000.00	22,000.00	178,200							
2	009605	C	WETLANDS	100		PUD	0.00	0.00	1.80	AC		1.00	1.00	1.00	6,800.00	6,800.00	12,240							

REVIEW DATE 08/14/2024 BY WW Total Acres: 9.90 Total Land Value: 190,440 Market: 0 Agricultural: 0 Common: 190,440 PRINTED 07/30/2025 BY SYS

LOT 71
TUPELO PLANTATION PB 7/206
ESMT IN OR 2658-1714

AKEL FRED C
33250 TUPELO LN
CALLAHAN, FL 32011

2025

16-1N-24-2090-0071-0000

NASSAU COUNTY PROPERTY

BUILDING CHARACTERISTICS

ELEMENT	CD	CONSTRUCTION
Exterior Wall	25	MOD METAL 100
Roof Structur	10	STEEL FRME 100
Roof Cover	12	MODULAR MT 100
Interior Wall	07	NONE 100
Interior Floo	03	CONC FINSH 100
Air Condition	01	NONE 100
Heating Type	01	NONE 100
Bedrooms		0 100
Bathrooms		0 100
Frame	05	STEEL 100
Quality	06	Quality Level 06
DOR CODE	0100	SINGLE FAMILY
MAP NUM		MKT AREA 09
NEIGHBORHOOD/LOC	9013.00	

AREA TYPE	TOTAL GROSS AREA	PCT OF BASE	YEAR	TOT ADJ AREA	SUBAREA MARKET VALUE
BAS	1,170	100	2024	1,170	26,120
TOTALS	1,170			1,170	26,120

MARKET ADJUSTMENTS

TYPE	MDL	EFF. AREA	TOT ADJ PTS	EFF. BASE RATE	REPL. COST NEW	AYB	EYB	ECON	FNCT		NORM	% COND
6500	01	1,170	60.9500	22.55	26,384	2024	2024	0	0	0	1.00	99.00

2 GARAGE RES – 100% - 2025 Heated Area: 1170 HX Base Yr 2025

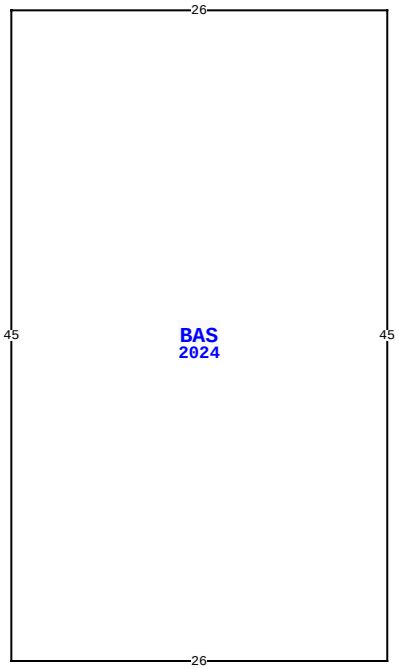

33250 TUPELO LN, CALLAHAN

BLD DATE		LGL DATE	
XF DATE		LAND DATE	05/07/2025 MLU
INC DATE		AG DATE	

VALUATION SUMMARY

VALUATION BY		STANDARD
Tax Group: 6	Tax Dist:	
BUILDING MARKET VALUE		492,807
TOTAL MARKET OB/XF VALUE		6,230
TOTAL LAND VALUE - MARKET		190,440
TOTAL MARKET VALUE		689,477
SOH/AGL Deduction		0
ASSESSED VALUE		689,477
TOTAL EXEMPTION VALUE	HX HB	50,722
BASE TAXABLE VALUE		638,755
TOTAL JUST VALUE		689,477
NCON VALUE		499,037
INCOME VALUE		
PREVIOUS YEAR MKT VALUE		156,600

PERMIT NUM	DESCRIPTION	AMT	ISSUED

SALES DATA

OFF RECORD Number	DATE	TYPE INST	Q / U	V / I	RSN CD	SALE PRICE
2426/0338	1/19/2021	WD	Q	V	01	82,000
GRANTOR: MCKENZIE JAY						
GRANTEE: AKEL FRED C						
2144/0244	8/21/2017	TD	U	V	11	62,000
GRANTOR: 33250 TRUST & ELIAS R						
GRANTEE: MCKENZIE JAY						

BUILDING NOTES

BUILDING DIMENSIONS

BAS=[YR=2024;ORIG=38,-1] E26 S45 W26 N45 $
.

EXTRA FEATURES

LN	OB/XF CODE	DESCRIPTION	BLD	CAP	L	W	UNITS	UT	Adj R	ADJ UNIT PRICE	ORIG COND	YEAR ON	YEAR ACTUAL	Q	% COND	OB/XF MKT VALUE	NOTES

LAND DESCRIPTION

TOTAL OB/XF 0

LN	USE CODE	CLS	LAND USE DESCRIPTION	CAP	RD	LOC ZONE	FRONT	DEPTH	TOT LND UTS	UNIT TYPE	DT	DPTH FACT	% COND	TOT ADJ	UNIT PRICE	ADJ UNIT PRICE	LAND VALUE	OTHER ADJUSTMENTS AND NOTES	YEAR	DENSITY	DECL	FRZ	YR	CONSRV

REVIEW DATE 08/14/2024 BY WW Total Acres: 9.90 Total Land Value: 190,440 Market: 0 Agricultural: 0 Common: 190,440 PRINTED 07/30/2025 BY SYS