PT OF NW1/4 OF NW1/4 OF
SEC 15-3N-24E IN OR 2561/842
ESMT IN OR 557/520 & UTIL

EO HILLIARD HOLDINGS LLC &/FLORIDA PR LLC & ET AL
13871 CR 1567
ADA, OK 74820

2025

15-3N-24-0000-0002-0030

NASSAU COUNTY PROPERTY

BUILDING CHARACTERISTICS

ELEMENT	CD	CONSTRUCTION
Exterior Wall	20	FACE BRICK 100
Roof Structur	04	WOOD TRUSS 100
Roof Cover	03	COMP SHNGL 100
Interior Wall	05	DRYWALL 100
Interior Floo	14	CARPET 100
Air Condition	03	CENTRAL 100
Heating Type	04	AIR DUCTED 100
Bedrooms		0 100
Bathrooms		2 100
Frame	02	WOOD FRAME 100
Story Height		0 100
RMS		0 100
Units		1 100
BUD8 Adjustme	04	DIST 01 100
Quality	03	Quality Level 03
DOR CODE	0300	MULTI-FAMILY
MAP NUM		MKT AREA 06
NEIGHBORHOOD/LOC	000	

AREA TYPE	TOTAL GROSS AREA	PCT OF BASE	YEAR	TOT ADJ AREA	SUBAREA MARKET VALUE
AOF	372	100	1993	372	31,006
BAS	1,336	100	1993	1,336	111,357
FOP	256	30	1993	77	6,418
FOP	256	30	1993	77	6,418
FUS	1,681	100	1993	1,681	140,113
STP	36	10	1993	4	333
TOTALS	3,937			3,547	295,646

MARKET ADJUSTMENTS

TYPE	MDL	EFF. AREA	TOT ADJ PTS	EFF. BASE RATE	REPL. COST NEW	AYB	EYB	ECON	FNCT		NORM	% COND
0301	03	3,547	115.3600	98.06	347,819	1974	2004	0	0	0	15.00	85.00

1 APARTMENT – 0% - 2023 Heated Area: 3389 HX Base Yr

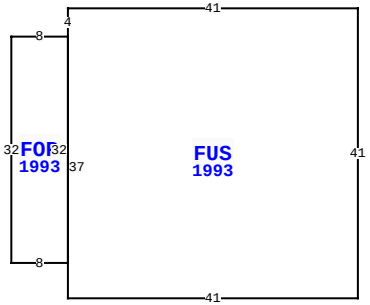

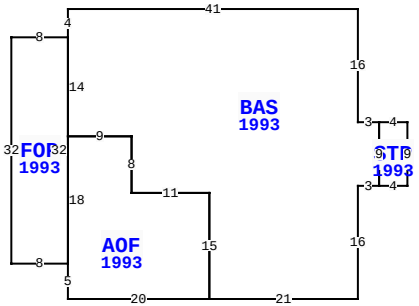

37031 CODY CIR, HILLIARD

BLD DATE	01/13/2021	KK	LGL DATE	
XF DATE	01/13/2021	KK	LAND DATE	01/13/2021 KK
INC DATE	04/22/2025	REA	AG DATE	

VALUATION SUMMARY

VALUATION BY	DIRECT_CAP
Tax Group: 3	Tax Dist:
BUILDING MARKET VALUE	9,860,941
TOTAL MARKET OB/XF VALUE	0
TOTAL LAND VALUE - MARKET	0
TOTAL MARKET VALUE	9,860,941
SOH/AGL Deduction	0
ASSESSED VALUE	9,860,941
TOTAL EXEMPTION VALUE	0
BASE TAXABLE VALUE	9,860,941
TOTAL JUST VALUE	9,860,941
NCON VALUE	0
INCOME VALUE	9,860,941
PREVIOUS YEAR MKT VALUE	10,297,615

PERMIT NUM	DESCRIPTION	AMT	ISSUED
20120032	ELEC OTHER	0	03/20/2012
20110257	ELEC OTHER	0	12/12/2011
20100080	ELEC OTHER	0	07/12/2010
20100045	ELEC OTHER	600	04/12/2010
E0908083	ELEC OTHER	450	08/06/2009
E0907069	ELEC OTHER	0	07/01/2009

SALES DATA

OFF RECORD Number	DATE	TYPE INST	Q / U	V / I	RSN CD	SALE PRICE
2561/0842	5/06/2022	SW	Q	I	01	13,500,000
GRANTOR: EASTWOOD OAKS LLC						
GRANTEE: EO HILLIARD HOLDING						
2215/0691	7/31/2018	WD	Q	I	01	7,000,000
GRANTOR: EASTWOOD OAKS APARTME						
GRANTEE: EASTWOOD OAKS LLC						

BUILDING NOTES

BUILDING DIMENSIONS

BAS=[YR=1993] W41 S4 FOP=[YR=1993] W8 S32 E8 AOF=[YR=1993] S5 E20 N15 W11 N8 W9 S18$ N32$S14 E9 S8 E11 S15 E21 N16 E3 STP=[YR=1993] E4 N9 W4 S9 $ N9 W3 N16$ PTR=N10 FUS=[YR=1993] N41 W41 S4 FOP=[YR=1993] W8 S32 E8 N32$ S37 E41$ S10 $.

EXTRA FEATURES

LN	OB/XF CODE	DESCRIPTION	BLD	CAP	L	W	UNITS	UT	Adj R	ADJ UNIT PRICE	ORIG COND	YEAR ON	YEAR ACTUAL	Q	% COND	OB/XF MKT VALUE	NOTES
1	0504	FP-ELECTRI	0	0	0	0	1.00	UT	2,000.00	2,000.00	100	1974	1974	3	32	640	
2	0866	POOL FIBER	0	0	0	0	800.00	SF	72.00	72.00	100	1974	1974	3	20	11,520	
3	0803	ASPHALT C	0	0	0	0	102,852.00	SF	2.00	2.00	100	1980	1980	3	50	102,852	
4	0812	CONCRETE C	0	0	0	0	27,755.00	SF	4.00	4.00	100	1974	1974	3	24	26,645	
5	0876	SAUNA BATH	0	0	0	0	1.00	UT	2,000.00	2,000.00	100	1974	1974	3	20	400	
6	0991	TENNIS CRT	0	0	0	0	1.00	UT	18,000.00	18,000.00	100	1974	1974	3	21	3,780	
7	0400	CONC CURB	0	0	0	0	421.00	LF	15.00	15.00	100	1985	1985	3	56	3,536	
8	0972	ST LGHT UN	0	0	0	0	27.00	UT	2,530.00	2,530.00	100	1990	1990	3	27	18,444	
9	0463	FENCE GATE	0	0	0	0	1.00	UT	300.00	300.00	100	2000	2000	3	48	144	
10	0427	CL FNC 10'	0	0	0	0	448.00	LF	13.51	13.51	100	2000	2000	3	48	2,905	

TOTAL OB/XF 170,866

LAND DESCRIPTION

LN	USE CODE	CLS	LAND USE DESCRIPTION	CAP	RD	LOC ZONE	FRONT	DEPTH	TOT LND UTS	UNIT TYPE	DT	DPTH FACT	% COND	TOT ADJ	UNIT PRICE	ADJ UNIT PRICE	LAND VALUE	OTHER ADJUSTMENTS AND NOTES	YEAR	DENSITY	DECL	FRZ	YR	CONSRV
1	000300	C	MULTI-FAMILY	0	0006	R-3	0.00	0.00	104.00	UT		1.00	1.00	1.00	11,000.00	11,000.00	1,144,000							

REVIEW DATE 01/13/2021 BY KK Total Acres: 0.00 Total Land Value: 0 Market: 0 Agricultural: 0 Common: 0 PRINTED 07/30/2025 BY SYS

PT OF NW1/4 OF NW1/4 OF
SEC 15-3N-24E IN OR 2561/842
ESMT IN OR 557/520 & UTIL

EO HILLIARD HOLDINGS LLC &/FLORIDA PR LLC & ET AL
13871 CR 1567
ADA, OK 74820

2025

15-3N-24-0000-0002-0030

NASSAU COUNTY PROPERTY

BUILDING CHARACTERISTICS

ELEMENT	CD	CONSTRUCTION
Exterior Wall	20	FACE BRICK 100
Roof Structur	04	WOOD TRUSS 100
Roof Cover	03	COMP SHNGL 100
Interior Wall	05	DRYWALL 100
Interior Floo	14	CARPET 100
Air Condition	03	CENTRAL 100
Heating Type	04	AIR DUCTED 100
Bedrooms		1 100
Bathrooms		1 100
Frame	02	WOOD FRAME 100
Story Height		0 100
RMS		0 100
Units		12 100
BUD8 Adjustme	04	DIST 01 100
Quality	03	Quality Level 03

DOR CODE 0300 MULTI-FAMILY
MAP NUM | MKT AREA 06
NEIGHBORHOOD/LOC 000

AREA TYPE	TOTAL GROSS AREA	PCT OF BASE	YEAR	TOT ADJ AREA	SUBAREA MARKET VALUE
BAS	4,945	100	1993	4,945	392,625
FOP	36	30	1993	11	874
FOP	138	30	1993	41	3,256
FOP	138	30	1993	41	3,256
FOP	144	30	1993	43	3,414
FOP	144	30	1993	43	3,414
FOP	144	30	1993	43	3,414
FOP	144	30	1993	43	3,414
FUS	4,891	100	1993	4,891	388,338
STP	36	10	1993	4	318
TOTALS	10,796			10,109	802,640

MARKET ADJUSTMENTS

TYPE	MDL	EFF. AREA	TOT ADJ PTS	EFF. BASE RATE	REPL. COST NEW	AYB	EYB	ECON	FNCT		NORM	% COND
0301	03	10,109	109.8900	93.41	944,282	1974	2004	0	0	0	15.00	85.00

2 APARTMENT – 0% - 2023 Heated Area: 9836 HX Base Yr

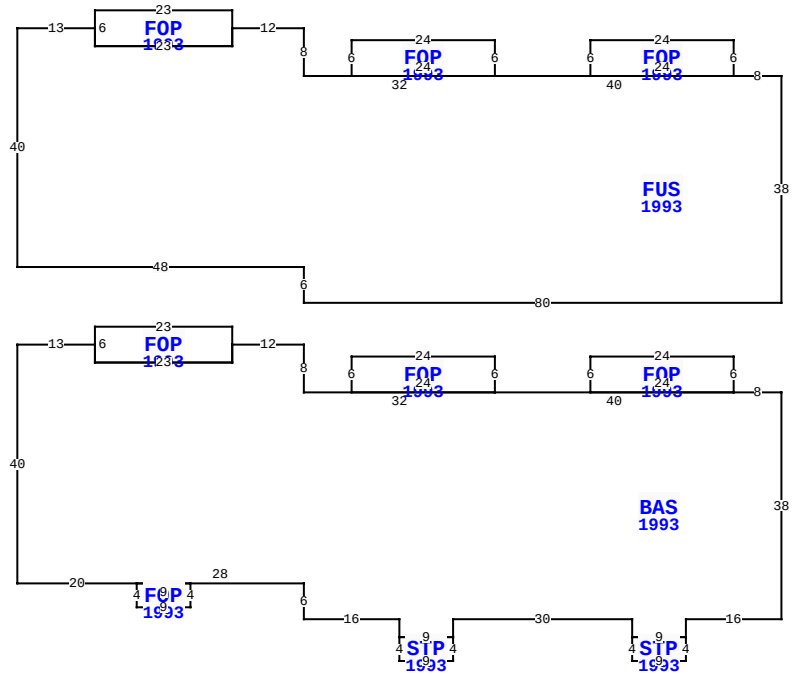

** This building has 11 Sub-Areas

37031 CODY CIR, HILLIARD

BLD DATE	01/13/2021	KK	LGL DATE	
XF DATE	01/13/2021	KK	LAND DATE	01/13/2021 KK
INC DATE	04/22/2025	REA	AG DATE	

VALUATION SUMMARY

VALUATION BY	DIRECT_CAP
Tax Group: 3	Tax Dist:
BUILDING MARKET VALUE	9,860,941
TOTAL MARKET OB/XF VALUE	0
TOTAL LAND VALUE - MARKET	0
TOTAL MARKET VALUE	9,860,941
SOH/AGL Deduction	0
ASSESSED VALUE	9,860,941
TOTAL EXEMPTION VALUE	0
BASE TAXABLE VALUE	9,860,941
TOTAL JUST VALUE	9,860,941
NCON VALUE	0
INCOME VALUE	9,860,941
PREVIOUS YEAR MKT VALUE	10,297,615

PERMIT NUM	DESCRIPTION	AMT	ISSUED
M0906063	H/AC	0	06/12/2009
B0809118	REPAIR/RRF	0	09/04/2008
B0801005	REPAIR/RRF	0	01/28/2008
B996054	REMODEL	15,000	01/05/1999
5364	REPAIR/RRF	40,000	12/09/1988

SALES DATA

OFF RECORD Number	DATE	TYPE INST	Q / U	V / I	RSN CD	SALE PRICE
2561/0842	5/06/2022	SW	Q	I	01	13,500,000
GRANTOR: EASTWOOD OAKS LLC						
GRANTEE: EO HILLIARD HOLDING						
2215/0691	7/31/2018	WD	Q	I	01	7,000,000
GRANTOR: EASTWOOD OAKS APARTME						
GRANTEE: EASTWOOD OAKS LLC						

BUILDING NOTES

BUILDING DIMENSIONS

BAS=[YR=1993] W8 FOP=[YR=1993] N6 W24 S6 E24$ W40
FOP=[YR=1993] N6 W24 S6 E24 $ W32 N8 W12 FOP=[YR=1993] N3 W23
S6 E23 N3$ S3 W23 N3 W13 S40 E20 FOP=[YR=1993] S4 E9 N4 W9$
E28 S6 E16 S3 STP=[YR=1993] S4 E9 N4 W9$ E9 N3 E30 S3
STP=[YR=1993] S4 E9 N4 W9$ E9 N3 E16 N38$ PTR=N15
FUS=[YR=1993] N38 W8 FOP=[YR=1993] N6 W24 S6 E24$ W40
FOP=[YR=1993] N6 W24 S6 E24$ W32 N8 W12 FOP=[YR=1993] N3 W23
S6 E23 N3$ S3 W23 N3 W13 S40 E48 S6 E80$ S15$.

EXTRA FEATURES

LN	OB/XF CODE	DESCRIPTION	BLD	CAP	L	W	UNITS	UT	Adj R	ADJ UNIT PRICE	ORIG COND	YEAR ON	YEAR ACTUAL	Q	% COND	OB/XF MKT VALUE	NOTES
11	0462	ST/AL FNC	0	0	0	0	1,224.00	SF	10.00	10.00	100	2001	2001	3	28	3,427	
12	0463	FENCE GATE	0	0	0	0	3.00	UT	300.00	300.00	100	2001	2001	3	52	468	

LAND DESCRIPTION

TOTAL OB/XF 3,895

LN	USE CODE	CLS	LAND USE DESCRIPTION	CAP	RD	LOC ZONE	FRONT	DEPTH	TOT LND UTS	UNIT TYPE	DT	DPTH FACT	% COND	TOT ADJ	UNIT PRICE	ADJ UNIT PRICE	LAND VALUE	OTHER ADJUSTMENTS AND NOTES	YEAR	DENSITY	DECL	FRZ	YR	CONSRV

REVIEW DATE 01/13/2021 BY KK Total Acres: 0.00 Total Land Value: 0 Market: 0 Agricultural: 0 Common: 0 PRINTED 07/30/2025 BY SYS

PT OF NW1/4 OF NW1/4 OF
SEC 15-3N-24E IN OR 2561/842
ESMT IN OR 557/520 & UTIL

EO HILLIARD HOLDINGS LLC &/FLORIDA PR LLC & ET AL
13871 CR 1567
ADA, OK 74820

2025

15-3N-24-0000-0002-0030

NASSAU COUNTY PROPERTY

BUILDING CHARACTERISTICS

ELEMENT	CD	CONSTRUCTION
Exterior Wall	20	FACE BRICK 100
Roof Structur	04	WOOD TRUSS 100
Roof Cover	03	COMP SHNGL 100
Interior Wall	05	DRYWALL 100
Interior Floo	14	CARPET 100
Air Condition	03	CENTRAL 100
Heating Type	04	AIR DUCTED 100
Bedrooms		1 100
Bathrooms		1 100
Frame	02	WOOD FRAME 100
Story Height		0 100
RMS		0 100
Units		8 100
BUD8 Adjustme	04	DIST 01 100
Quality	03	Quality Level 03

DOR CODE 0300 MULTI-FAMILY
MAP NUM | MKT AREA 06
NEIGHBORHOOD/LOC 000

AREA TYPE	TOTAL GROSS AREA	PCT OF BASE	YEAR	TOT ADJ AREA	SUBAREA MARKET VALUE
BAS	3,138	100	1993	3,138	254,167
FOP	144	30	1993	43	3,482
FOP	144	30	1993	43	3,482
FOP	144	30	1993	43	3,482
FOP	144	30	1993	43	3,482
FUS	3,084	100	1993	3,084	249,793
STP	36	10	1993	4	324
STP	36	10	1993	4	324
TOTALS	6,870			6,402	518,540

MARKET ADJUSTMENTS

TYPE	MDL	EFF. AREA	TOT ADJ PTS	EFF. BASE RATE	REPL. COST NEW	AYB	EYB	ECON	FNCT		NORM	% COND
0301	03	6,402	112.1100	95.29	610,047	1974	2004	0	0	0	15.00	85.00

3 APARTMENT – 0% - 2023 Heated Area: 6222 HX Base Yr

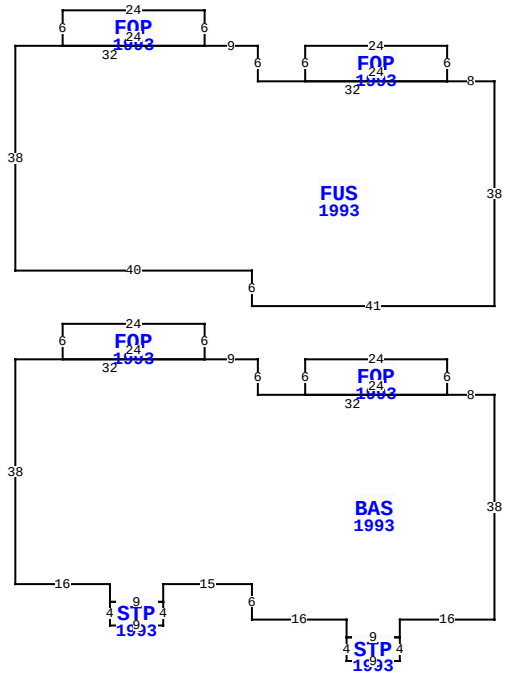

37031 CODY CIR, HILLIARD

BLD DATE	01/13/2021	KK	LGL DATE	
XF DATE	01/13/2021	KK	LAND DATE	01/13/2021 KK
INC DATE	04/22/2025	REA	AG DATE	

VALUATION SUMMARY

VALUATION BY	DIRECT_CAP
Tax Group: 3	Tax Dist:
BUILDING MARKET VALUE	9,860,941
TOTAL MARKET OB/XF VALUE	0
TOTAL LAND VALUE - MARKET	0
TOTAL MARKET VALUE	9,860,941
SOH/AGL Deduction	0
ASSESSED VALUE	9,860,941
TOTAL EXEMPTION VALUE	0
BASE TAXABLE VALUE	9,860,941
TOTAL JUST VALUE	9,860,941
NCON VALUE	0
INCOME VALUE	9,860,941
PREVIOUS YEAR MKT VALUE	10,297,615

PERMIT NUM	DESCRIPTION	AMT	ISSUED

SALES DATA

OFF RECORD Number	DATE	TYPE INST	Q U	V I	RSN CD	SALE PRICE
2561/0842	5/06/2022	SW	Q	I	01	13,500,000
GRANTOR: EASTWOOD OAKS LLC						
GRANTEE: EO HILLIARD HOLDING						
2215/0691	7/31/2018	WD	Q	I	01	7,000,000
GRANTOR: EASTWOOD OAKS APARTME						
GRANTEE: EASTWOOD OAKS LLC						

BUILDING NOTES

BUILDING DIMENSIONS

BAS=[YR=1993] W8 FOP=[YR=1993] N6 W24 S6 E24$ W32 N6 W9 FOP=[YR=1993] N6 W24 S6 E24$ W32 S38 E16 S3 STP=[YR=1993] S4 E9 N4 W9$ E9N3 E15 S6 E16 S3 STP=[YR=1993] S4 E9 N4 W9$ E9 N3 E16 N38$ PTR=N15 FUS=[YR=1993] N38 W8 FOP=[YR=1993] N6 W24 S6 E24$ W32 N6 W9 FOP=[YR=1993] N6 W24 S6 E24$ W32 S38 E40 S6 E41 $ S15$.

EXTRA FEATURES

L N	OB/XF CODE	DESCRIPTION	BLD	CAP	L	W	UNITS	UT	Adj R	ADJ UNIT PRICE	ORIG COND	YEAR ON	YEAR ACTUAL	Q	% COND	OB/XF MKT VALUE	NOTES

LAND DESCRIPTION

TOTAL OB/XF 0

L N	USE CODE	CLS	LAND USE DESCRIPTION	CAP	R D	LOC ZONE	FRONT	DEPTH	TOT LND UTS	UNIT TYPE	D T	DPTH FACT	% COND	TOT ADJ	UNIT PRICE	ADJ UNIT PRICE	LAND VALUE	OTHER ADJUSTMENTS AND NOTES	YEAR	DENSITY	DECL	FRZ	YR	CONSRV

REVIEW DATE 01/13/2021 BY KK Total Acres: 0.00 Total Land Value: 0 Market: 0 Agricultural: 0 Common: 0 PRINTED 07/30/2025 BY SYS

PT OF NW1/4 OF NW1/4 OF
SEC 15-3N-24E IN OR 2561/842
ESMT IN OR 557/520 & UTIL

EO HILLIARD HOLDINGS LLC &/FLORIDA PR LLC & ET AL
13871 CR 1567
ADA, OK 74820

2025

15-3N-24-0000-0002-0030

NASSAU COUNTY PROPERTY

BUILDING CHARACTERISTICS

ELEMENT	CD	CONSTRUCTION
Exterior Wall	20	FACE BRICK 100
Roof Structur	04	WOOD TRUSS 100
Roof Cover	03	COMP SHNGL 100
Interior Wall	05	DRYWALL 100
Interior Floo	14	CARPET 100
Air Condition	03	CENTRAL 100
Heating Type	04	AIR DUCTED 100
Bedrooms		1 100
Bathrooms		1.5 100
Frame	02	WOOD FRAME 100
Story Height		0 100
RMS		0 100
Units		12 100
BUD8 Adjustme	04	DIST 01 100
Quality	03	Quality Level 03

DOR CODE 0300 MULTI-FAMILY
MAP NUM | MKT AREA 06
NEIGHBORHOOD/LOC 000

AREA TYPE	TOTAL GROSS AREA	PCT OF BASE	YEAR	TOT ADJ AREA	SUBAREA MARKET VALUE
BAS	5,418	100	1993	5,418	434,050
FOP	36	30	1993	11	881
FOP	144	30	1993	43	3,445
FOP	144	30	1993	43	3,445
FOP	144	30	1993	43	3,445
FOP	144	30	1993	43	3,445
FOP	150	30	1993	45	3,605
FOP	150	30	1993	45	3,605
FUS	5,364	100	1993	5,364	429,723
STP	36	10	1993	4	320
TOTALS	11,766			11,063	886,285

MARKET ADJUSTMENTS

TYPE	MDL	EFF. AREA	TOT ADJ PTS	EFF. BASE RATE	REPL. COST NEW	AYB	EYB	ECON	FNCT		NORM	% COND
0301	03	11,063	110.8800	94.25	1,042,688	1974	2004	0	0	0	15.00	85.00

4 APARTMENT – 0% - 2023 Heated Area: 10782 HX Base Yr

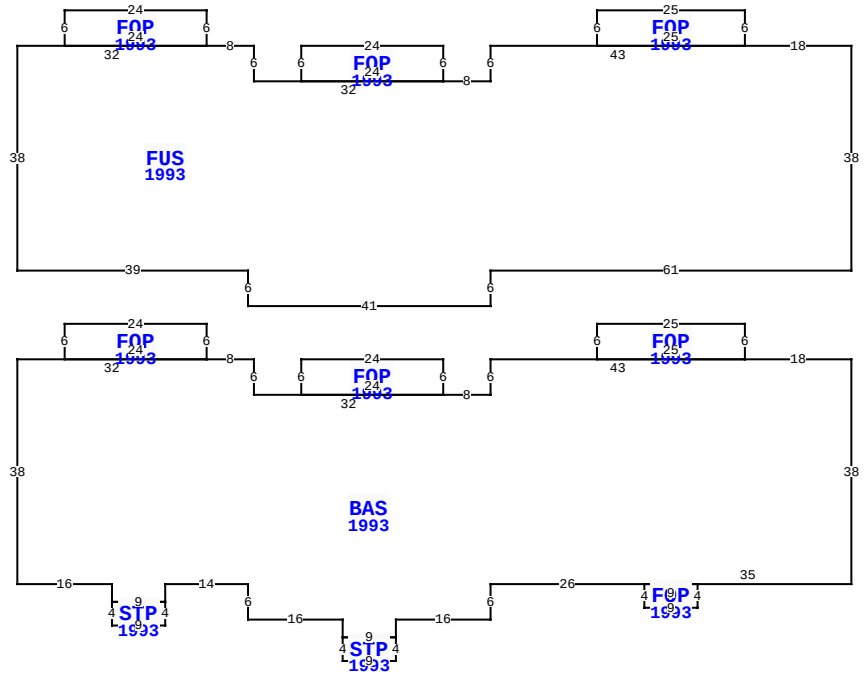

** This building has 11 Sub-Areas

37031 CODY CIR, HILLIARD

BLD DATE	01/13/2021	KK	LGL DATE	
XF DATE	01/13/2021	KK	LAND DATE	01/13/2021 KK
INC DATE	04/22/2025	REA	AG DATE	

VALUATION SUMMARY

VALUATION BY	DIRECT_CAP
Tax Group: 3	Tax Dist:
BUILDING MARKET VALUE	9,860,941
TOTAL MARKET OB/XF VALUE	0
TOTAL LAND VALUE - MARKET	0
TOTAL MARKET VALUE	9,860,941
SOH/AGL Deduction	0
ASSESSED VALUE	9,860,941
TOTAL EXEMPTION VALUE	0
BASE TAXABLE VALUE	9,860,941
TOTAL JUST VALUE	9,860,941
NCON VALUE	0
INCOME VALUE	9,860,941
PREVIOUS YEAR MKT VALUE	10,297,615

PERMIT NUM	DESCRIPTION	AMT	ISSUED

SALES DATA

OFF RECORD Number	DATE	TYPE INST	Q U	V I	RSN CD	SALE PRICE
2561/0842	5/06/2022	SW	Q	I	01	13,500,000
GRANTOR: EASTWOOD OAKS LLC						
GRANTEE: EO HILLIARD HOLDING						
2215/0691	7/31/2018	WD	Q	I	01	7,000,000
GRANTOR: EASTWOOD OAKS APARTME						
GRANTEE: EASTWOOD OAKS LLC						

BUILDING NOTES

BUILDING DIMENSIONS

BAS=[YR=1993] W18 FOP=[YR=1993] N6 W25 S6 E25$ W43S6 W8 FOP=[YR=1993] N6 W24 S6 E24$ W32 N6 W8 FOP=[YR=1993] N6 W24 S6 E24$ W32 S38 E16 S3 STP=[YR=1993] S4 E9 N4 W9$ E9N3 E14 S6 E16 S3 STP=[YR=1993] S4 E9 N4 W9$ E9 N3 E16 N6 E26 FOP=[YR=1993] S4 E9 N4 W9$ E35 N38$ PTR=N15 FUS=[YR=1993] N38 W18 FOP=[YR=1993] N6 W25 S6 E25$ W43S6 W8 FOP=[YR=1993] N6 W24 S6 E24$ W32 N6 W8 FOP=[YR=1993] N6 W24 S6 E24$ W32 S38 E39 S6 E41 N6 E61$ S15$.

EXTRA FEATURES

L N	OB/XF CODE	DESCRIPTION	BLD	CAP	L	W	UNITS	UT	Adj R	ADJ UNIT PRICE	ORIG COND	YEAR ON	YEAR ACTUAL	Q	% COND	OB/XF MKT VALUE	NOTES

LAND DESCRIPTION

TOTAL OB/XF 0

L N	USE CODE	CLS	LAND USE DESCRIPTION	CAP	R D	LOC ZONE	FRONT	DEPTH	TOT LND UTS	UNIT TYPE	D T	DPTH FACT	% COND	TOT ADJ	UNIT PRICE	ADJ UNIT PRICE	LAND VALUE	OTHER ADJUSTMENTS AND NOTES	YEAR	DENSITY	DECL	FRZ	YR	CONSRV

REVIEW DATE 01/13/2021 BY KK Total Acres: 0.00 Total Land Value: 0 Market: 0 Agricultural: 0 Common: 0 PRINTED 07/30/2025 BY SYS

PT OF NW1/4 OF NW1/4 OF
SEC 15-3N-24E IN OR 2561/842
ESMT IN OR 557/520 & UTIL

EO HILLIARD HOLDINGS LLC &/FLORIDA PR LLC & ET AL
13871 CR 1567
ADA, OK 74820

2025

15-3N-24-0000-0002-0030

NASSAU COUNTY PROPERTY

BUILDING CHARACTERISTICS

ELEMENT	CD	CONSTRUCTION
Exterior Wall	20	FACE BRICK 100
Roof Structur	04	WOOD TRUSS 100
Roof Cover	03	COMP SHNGL 100
Interior Wall	05	DRYWALL 100
Interior Floo	14	CARPET 100
Air Condition	03	CENTRAL 100
Heating Type	04	AIR DUCTED 100
Bedrooms		2 100
Bathrooms		2 100
Frame	02	WOOD FRAME 100
Story Height		0 100
RMS		0 100
Units		8 100
BUD8 Adjustme	04	DIST 01 100
Quality	03	Quality Level 03

DOR CODE 0300 MULTI-FAMILY
MAP NUM | MKT AREA 06
NEIGHBORHOOD/LOC 000

AREA TYPE	TOTAL GROSS AREA	PCT OF BASE	YEAR	TOT ADJ AREA	SUBAREA MARKET VALUE
BAS	4,636	100	1993	4,636	381,844
FOP	150	30	1993	45	3,707
FOP	150	30	1993	45	3,707
FOP	150	30	1993	45	3,707
FOP	150	30	1993	45	3,707
FUS	4,636	100	1993	4,636	381,844
UOP	36	20	1993	7	576
UOP	36	20	1993	7	576
TOTALS	9,944			9,466	779,667

MARKET ADJUSTMENTS

TYPE	MDL	EFF. AREA	TOT ADJ PTS	EFF. BASE RATE	REPL. COST NEW	AYB	EYB	ECON	FNCT		NORM	% COND
0301	03	9,466	114.0000	96.90	917,255	1974	2004	0	0	0	15.00	85.00

5 APARTMENT – 0% - 2023 Heated Area: 9272 HX Base Yr

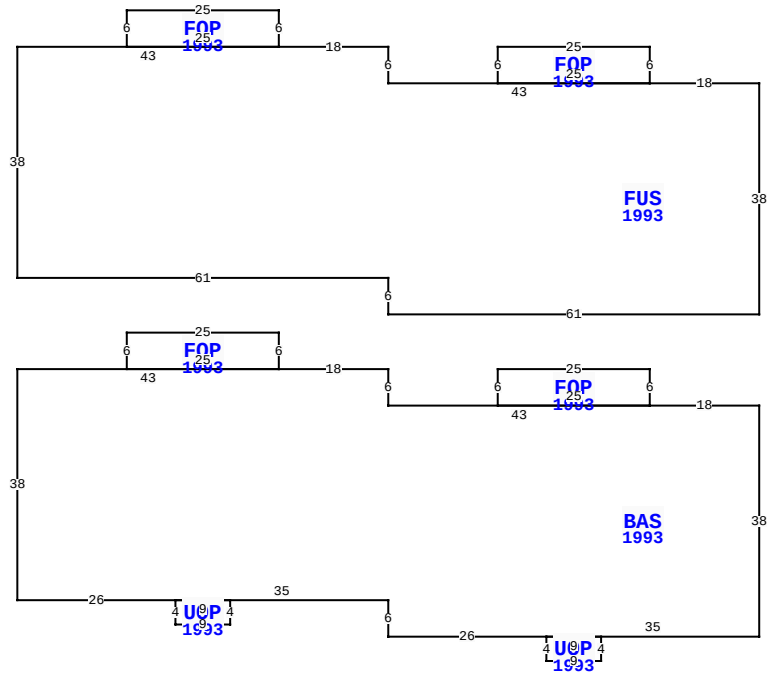

37031 CODY CIR, HILLIARD

BLD DATE	01/13/2021	KK	LGL DATE	
XF DATE	01/13/2021	KK	LAND DATE	01/13/2021 KK
INC DATE	04/22/2025	REA	AG DATE	

VALUATION SUMMARY

VALUATION BY	DIRECT_CAP
Tax Group: 3	Tax Dist:
BUILDING MARKET VALUE	9,860,941
TOTAL MARKET OB/XF VALUE	0
TOTAL LAND VALUE - MARKET	0
TOTAL MARKET VALUE	9,860,941
SOH/AGL Deduction	0
ASSESSED VALUE	9,860,941
TOTAL EXEMPTION VALUE	0
BASE TAXABLE VALUE	9,860,941
TOTAL JUST VALUE	9,860,941
NCON VALUE	0
INCOME VALUE	9,860,941
PREVIOUS YEAR MKT VALUE	10,297,615

PERMIT NUM	DESCRIPTION	AMT	ISSUED

SALES DATA

OFF RECORD Number	DATE	TYPE INST	Q U	/	V I	/	RSN CD	SALE PRICE
2561/0842	5/06/2022	SW	Q		I		01	13,500,000
GRANTOR: EASTWOOD OAKS LLC								
GRANTEE: EO HILLIARD HOLDING								
2215/0691	7/31/2018	WD	Q		I		01	7,000,000
GRANTOR: EASTWOOD OAKS APARTME								
GRANTEE: EASTWOOD OAKS LLC								

BUILDING NOTES

BUILDING DIMENSIONS

BAS=[YR=1993] W18 FOP=[YR=1993] N6 W25 S6 E25$ W43N6 W18 FOP=[YR=1993] N6 W25 S6 E25$ W43 S38 E26 UOP=[YR=1993] S4 E9 N4 W9$ E35 S6 E26 UOP=[YR=1993] S4 E9 N4 W9$ E35 N38$ PTR=N15 FUS=[YR=1993] N38 W18 FOP=[YR=1993] N6 W25 S6 E25$ W43 N6 W18 FOP=[YR=1993] N6 W25 S6 E25$ W43 S38 E61 S6 E61 $ S15$.

EXTRA FEATURES

LN	OB/XF CODE	DESCRIPTION	BLD	CAP	L	W	UNITS	UT	Adj R	ADJ UNIT PRICE	ORIG COND	YEAR ON	YEAR ACTUAL	Q	% COND	OB/XF MKT VALUE	NOTES

LAND DESCRIPTION

TOTAL OB/XF 0

LN	USE CODE	CLS	LAND USE DESCRIPTION	CAP	RD	LOC ZONE	FRONT	DEPTH	TOT LND UTS	UNIT TYPE	DT	DPTH FACT	% COND	TOT ADJ	UNIT PRICE	ADJ UNIT PRICE	LAND VALUE	OTHER ADJUSTMENTS AND NOTES	YEAR	DENSITY	DECL	FRZ	YR	CONSRV

REVIEW DATE 01/13/2021 BY KK Total Acres: 0.00 Total Land Value: 0 Market: 0 Agricultural: 0 Common: 0 PRINTED 07/30/2025 BY SYS

PT OF NW1/4 OF NW1/4 OF
SEC 15-3N-24E IN OR 2561/842
ESMT IN OR 557/520 & UTIL

EO HILLIARD HOLDINGS LLC &/FLORIDA PR LLC & ET AL
13871 CR 1567
ADA, OK 74820

2025

15-3N-24-0000-0002-0030

NASSAU COUNTY PROPERTY

BUILDING CHARACTERISTICS

ELEMENT	CD	CONSTRUCTION
Exterior Wall	20	FACE BRICK 100
Roof Structur	04	WOOD TRUSS 100
Roof Cover	03	COMP SHNGL 100
Interior Wall	05	DRYWALL 100
Interior Floo	14	CARPET 100
Air Condition	03	CENTRAL 100
Heating Type	04	AIR DUCTED 100
Bedrooms		3 100
Bathrooms		2 100
Frame	02	WOOD FRAME 100
Story Height		0 100
RMS		0 100
Units		4 100
BUD8 Adjustme	04	DIST 01 100
Quality	03	Quality Level 03

DOR CODE 0300 MULTI-FAMILY
MAP NUM | MKT AREA 06
NEIGHBORHOOD/LOC 000

AREA TYPE	TOTAL GROSS AREA	PCT OF BASE	YEAR	TOT ADJ AREA	SUBAREA MARKET VALUE
BAS	2,768	100	1993	2,768	234,575
FOP	150	30	1993	45	3,814
FOP	150	30	1993	45	3,814
FOP	280	30	1993	84	7,119
FUS	2,748	100	1993	2,748	232,880
TOTALS	6,096			5,690	482,199

MARKET ADJUSTMENTS

TYPE	MDL	EFF. AREA	TOT ADJ PTS	EFF. BASE RATE	REPL. COST NEW	AYB	EYB	ECON	FNCT		NORM	% COND
0301	03	5,690	117.3000	99.70	567,293	1974	2004	0	0	0	15.00	85.00

6 APARTMENT – 0% - 2023 Heated Area: 5516 HX Base Yr

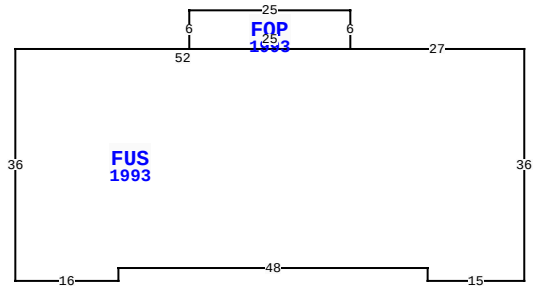

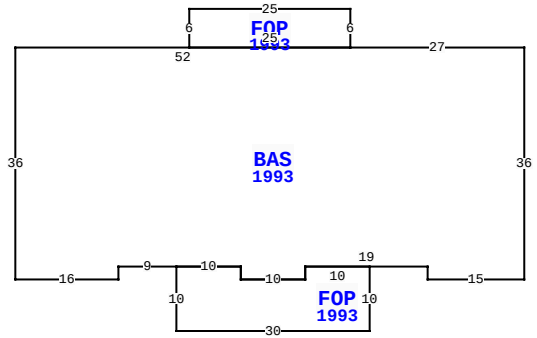

37031 CODY CIR, HILLIARD

BLD DATE	01/13/2021	KK	LGL DATE	
XF DATE	01/13/2021	KK	LAND DATE	01/13/2021 KK
INC DATE	04/22/2025	REA	AG DATE	

NASSAU COUNTY PROPERTY — VALUATION SUMMARY

VALUATION BY	DIRECT_CAP
Tax Group: 3	Tax Dist:
BUILDING MARKET VALUE	9,860,941
TOTAL MARKET OB/XF VALUE	0
TOTAL LAND VALUE - MARKET	0
TOTAL MARKET VALUE	9,860,941
SOH/AGL Deduction	0
ASSESSED VALUE	9,860,941
TOTAL EXEMPTION VALUE	0
BASE TAXABLE VALUE	9,860,941
TOTAL JUST VALUE	9,860,941
NCON VALUE	0
INCOME VALUE	9,860,941
PREVIOUS YEAR MKT VALUE	10,297,615

PERMIT NUM	DESCRIPTION	AMT	ISSUED

SALES DATA

OFF RECORD Number	DATE	TYPE INST	Q U	V I	RSN CD	SALE PRICE
2561/0842	5/06/2022	SW	Q	I	01	13,500,000
GRANTOR: EASTWOOD OAKS LLC						
GRANTEE: EO HILLIARD HOLDING						
2215/0691	7/31/2018	WD	Q	I	01	7,000,000
GRANTOR: EASTWOOD OAKS APARTME						
GRANTEE: EASTWOOD OAKS LLC						

BUILDING NOTES

BUILDING DIMENSIONS

BAS=[YR=1993] W27 FOP=[YR=1993] N6 W25 S6 E25$ W52S36 E16 N2 E9 FOP=[YR=1993] S10 E30 N10 W10 S2 W10 N2 W10$ E10 S2 E10 N2 E19 S2 E15 N36$ PTR=N15 FUS=[YR=1993] N36 W27 FOP=[YR=1993] N6 W25 S6 E25$W52 S36 E16 N2 E48 S2 E15$ S15$.

EXTRA FEATURES

L N	OB/XF CODE	DESCRIPTION	BLD	CAP	L	W	UNITS	UT	Adj R	ADJ UNIT PRICE	ORIG COND	YEAR ON	YEAR ACTUAL	Q	% COND	OB/XF MKT VALUE	NOTES

LAND DESCRIPTION

TOTAL OB/XF 0

L N	USE CODE	CLS	LAND USE DESCRIPTION	CAP	R D	LOC ZONE	FRONT	DEPTH	TOT LND UTS	UNIT TYPE	D T	DPTH FACT	% COND	TOT ADJ	UNIT PRICE	ADJ UNIT PRICE	LAND VALUE	OTHER ADJUSTMENTS AND NOTES	YEAR	DENSITY	DECL	FRZ	YR	CONSRV

REVIEW DATE 01/13/2021 BY KK Total Acres: 0.00 Total Land Value: 0 Market: 0 Agricultural: 0 Common: 0 PRINTED 07/30/2025 BY SYS

PT OF NW1/4 OF NW1/4 OF
SEC 15-3N-24E IN OR 2561/842
ESMT IN OR 557/520 & UTIL

EO HILLIARD HOLDINGS LLC &/FLORIDA PR LLC & ET AL
13871 CR 1567
ADA, OK 74820

2025

15-3N-24-0000-0002-0030

NASSAU COUNTY PROPERTY

BUILDING CHARACTERISTICS

ELEMENT	CD	CONSTRUCTION
Exterior Wall	20	FACE BRICK 100
Roof Structur	04	WOOD TRUSS 100
Roof Cover	03	COMP SHNGL 100
Interior Wall	05	DRYWALL 100
Interior Floo	14	CARPET 100
Air Condition	03	CENTRAL 100
Heating Type	04	AIR DUCTED 100
Bedrooms		2 100
Bathrooms		2 100
Frame	02	WOOD FRAME 100
Story Height		0 100
RMS		0 100
Units		4 100
BUD8 Adjustme	04	DIST 01 100
Quality	03	Quality Level 03

DOR CODE 0300 MULTI-FAMILY
MAP NUM | MKT AREA 06
NEIGHBORHOOD/LOC 000

AREA TYPE	TOTAL GROSS AREA	PCT OF BASE	YEAR	TOT ADJ AREA	SUBAREA MARKET VALUE
BAS	2,280	100	1993	2,280	191,552
FOP	144	30	1993	43	3,613
FOP	144	30	1993	43	3,613
FUS	2,280	100	1993	2,280	191,552
UOP	36	20	1993	7	588
TOTALS	4,884			4,653	390,918

MARKET ADJUSTMENTS

TYPE	MDL	EFF. AREA	TOT ADJ PTS	EFF. BASE RATE	REPL. COST NEW	AYB	EYB	ECON	FNCT		NORM	% COND
0301	03	4,653	116.2800	98.84	459,903	1974	2004	0	0	0	15.00	85.00

7 APARTMENT – 0% - 2023 Heated Area: 4560 HX Base Yr

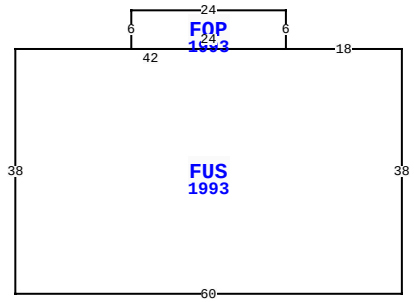

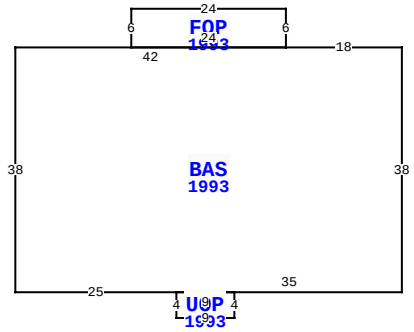

37031 CODY CIR, HILLIARD

BLD DATE	01/13/2021	KK	LGL DATE	
XF DATE	01/13/2021	KK	LAND DATE	01/13/2021 KK
INC DATE	04/22/2025	REA	AG DATE	

VALUATION SUMMARY

VALUATION BY	DIRECT_CAP
Tax Group: 3	Tax Dist:
BUILDING MARKET VALUE	9,860,941
TOTAL MARKET OB/XF VALUE	0
TOTAL LAND VALUE - MARKET	0
TOTAL MARKET VALUE	9,860,941
SOH/AGL Deduction	0
ASSESSED VALUE	9,860,941
TOTAL EXEMPTION VALUE	0
BASE TAXABLE VALUE	9,860,941
TOTAL JUST VALUE	9,860,941
NCON VALUE	0
INCOME VALUE	9,860,941
PREVIOUS YEAR MKT VALUE	10,297,615

PERMIT NUM	DESCRIPTION	AMT	ISSUED

SALES DATA

OFF RECORD Number	DATE	TYPE INST	Q / U	V / I	RSN CD	SALE PRICE
2561/0842	5/06/2022	SW	Q	I	01	13,500,000
GRANTOR: EASTWOOD OAKS LLC						
GRANTEE: EO HILLIARD HOLDING						
2215/0691	7/31/2018	WD	Q	I	01	7,000,000
GRANTOR: EASTWOOD OAKS APARTME						
GRANTEE: EASTWOOD OAKS LLC						

BUILDING NOTES

BUILDING DIMENSIONS

BAS=[YR=1993] W18 FOP=[YR=1993] N6 W24 S6 E24$ W42S38 E25
UOP=[YR=1993] S4 E9 N4 W9$ E35 N38$ PTR=N15 FUS=[YR=1993] N38
W18 FOP=[YR=1993] N6 W24 S6 E24$ W42 S38 E60$ S15$.

EXTRA FEATURES

L N	OB/XF CODE	DESCRIPTION	BLD	CAP	L	W	UNITS	UT	Adj R	ADJ UNIT PRICE	ORIG COND	YEAR ON	YEAR ACTUAL	Q	% COND	OB/XF MKT VALUE	NOTES

LAND DESCRIPTION

TOTAL OB/XF 0

L N	USE CODE	CLS	LAND USE DESCRIPTION	CAP	R D	LOC ZONE	FRONT	DEPTH	TOT LND UTS	UNIT TYPE	D T	DPTH FACT	% COND	TOT ADJ	UNIT PRICE	ADJ UNIT PRICE	LAND VALUE	OTHER ADJUSTMENTS AND NOTES	YEAR	DENSITY	DECL	FRZ	YR	CONSRV

REVIEW DATE 01/13/2021 BY KK Total Acres: 0.00 Total Land Value: 0 Market: 0 Agricultural: 0 Common: 0 PRINTED 07/30/2025 BY SYS

PT OF NW1/4 OF NW1/4 OF
SEC 15-3N-24E IN OR 2561/842
ESMT IN OR 557/520 & UTIL

EO HILLIARD HOLDINGS LLC &/FLORIDA PR LLC & ET AL
13871 CR 1567
ADA, OK 74820

2025

15-3N-24-0000-0002-0030

NASSAU COUNTY PROPERTY

BUILDING CHARACTERISTICS

ELEMENT	CD	CONSTRUCTION
Exterior Wall	20	FACE BRICK 100
Roof Structur	04	WOOD TRUSS 100
Roof Cover	03	COMP SHNGL 100
Interior Wall	05	DRYWALL 100
Interior Floo	14	CARPET 100
Air Condition	03	CENTRAL 100
Heating Type	04	AIR DUCTED 100
Bedrooms		3 100
Bathrooms		2 100
Frame	02	WOOD FRAME 100
Story Height		0 100
RMS		0 100
Units		4 100
BUD8 Adjustme	04	DIST 01 100
Quality	03	Quality Level 03

DOR CODE 0300 MULTI-FAMILY
MAP NUM | MKT AREA 06
NEIGHBORHOOD/LOC 000

AREA TYPE	TOTAL GROSS AREA	PCT OF BASE	YEAR	TOT ADJ AREA	SUBAREA MARKET VALUE
BAS	2,768	100	1993	2,768	234,575
FOP	150	30	1993	45	3,814
FOP	150	30	1993	45	3,814
FOP	280	30	1993	84	7,119
FUS	2,748	100	1993	2,748	232,880
TOTALS	6,096			5,690	482,199

MARKET ADJUSTMENTS

TYPE	MDL	EFF. AREA	TOT ADJ PTS	EFF. BASE RATE	REPL. COST NEW	AYB	EYB	ECON	FNCT		NORM	% COND
0301	03	5,690	117.3000	99.70	567,293	1974	2004	0	0	0	15.00	85.00

8 APARTMENT – 0% - 2023 Heated Area: 5516 HX Base Yr

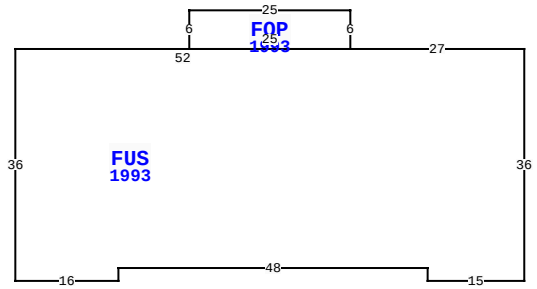

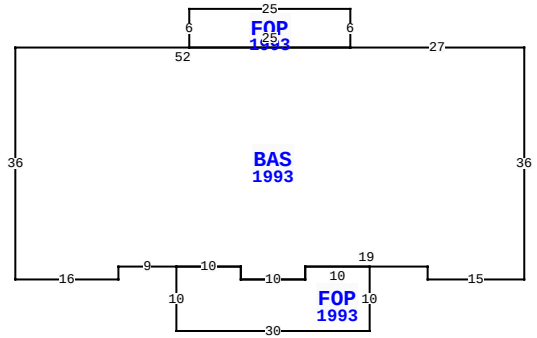

37031 CODY CIR, HILLIARD

BLD DATE	01/13/2021	KK	LGL DATE	
XF DATE	01/13/2021	KK	LAND DATE	01/13/2021 KK
INC DATE	04/22/2025	REA	AG DATE	

VALUATION SUMMARY

VALUATION BY	DIRECT_CAP
Tax Group: 3	Tax Dist:
BUILDING MARKET VALUE	9,860,941
TOTAL MARKET OB/XF VALUE	0
TOTAL LAND VALUE - MARKET	0
TOTAL MARKET VALUE	9,860,941
SOH/AGL Deduction	0
ASSESSED VALUE	9,860,941
TOTAL EXEMPTION VALUE	0
BASE TAXABLE VALUE	9,860,941
TOTAL JUST VALUE	9,860,941
NCON VALUE	0
INCOME VALUE	9,860,941
PREVIOUS YEAR MKT VALUE	10,297,615

PERMIT NUM	DESCRIPTION	AMT	ISSUED

SALES DATA

OFF RECORD Number	DATE	TYPE INST	Q U	V I	RSN CD	SALE PRICE
2561/0842	5/06/2022	SW	Q	I	01	13,500,000
GRANTOR: EASTWOOD OAKS LLC						
GRANTEE: EO HILLIARD HOLDING						
2215/0691	7/31/2018	WD	Q	I	01	7,000,000
GRANTOR: EASTWOOD OAKS APARTME						
GRANTEE: EASTWOOD OAKS LLC						

BUILDING NOTES

BUILDING DIMENSIONS

BAS=[YR=1993] W27 FOP=[YR=1993] N6 W25 S6 E25$ W52S36 E16 N2 E9 FOP=[YR=1993] S10 E30 N10 W10 S2 W10 N2 W10$ E10 S2 E10 N2 E19 S2 E15 N36$ PTR=N15 FUS=[YR=1993] N36 W27 FOP=[YR=1993] N6 W25 S6 E25$W52 S36 E16 N2 E48 S2 E15 $ S15$.

EXTRA FEATURES

L N	OB/XF CODE	DESCRIPTION	BLD	CAP	L	W	UNITS	UT	Adj R	ADJ UNIT PRICE	ORIG COND	YEAR ON	YEAR ACTUAL	Q	% COND	OB/XF MKT VALUE	NOTES

LAND DESCRIPTION

TOTAL OB/XF 0

L N	USE CODE	CLS	LAND USE DESCRIPTION	CAP	R D	LOC ZONE	FRONT	DEPTH	TOT LND UTS	UNIT TYPE	D T	DPTH FACT	% COND	TOT ADJ	UNIT PRICE	ADJ UNIT PRICE	LAND VALUE	OTHER ADJUSTMENTS AND NOTES	YEAR	DENSITY	DECL	FRZ	YR	CONSRV

REVIEW DATE 01/13/2021 BY KK Total Acres: 0.00 Total Land Value: 0 Market: 0 Agricultural: 0 Common: 0 PRINTED 07/30/2025 BY SYS

PT OF NW1/4 OF NW1/4 OF
SEC 15-3N-24E IN OR 2561/842
ESMT IN OR 557/520 & UTIL

EO HILLIARD HOLDINGS LLC &/FLORIDA PR LLC & ET AL
13871 CR 1567
ADA, OK 74820

2025

15-3N-24-0000-0002-0030

NASSAU COUNTY PROPERTY

BUILDING CHARACTERISTICS

ELEMENT	CD	CONSTRUCTION
Exterior Wall	20	FACE BRICK 100
Roof Structur	04	WOOD TRUSS 100
Roof Cover	03	COMP SHNGL 100
Interior Wall	05	DRYWALL 100
Interior Floo	14	CARPET 100
Air Condition	03	CENTRAL 100
Heating Type	04	AIR DUCTED 100
Bedrooms		2 100
Bathrooms		2 100
Frame	02	WOOD FRAME 100
Story Height		0 100
RMS		0 100
Units		4 100
BUD8 Adjustme	04	DIST 01 100
Quality	03	Quality Level 03

DOR CODE 0300 MULTI-FAMILY
MAP NUM | MKT AREA 06
NEIGHBORHOOD/LOC 000

AREA TYPE	TOTAL GROSS AREA	PCT OF BASE	YEAR	TOT ADJ AREA	SUBAREA MARKET VALUE
BAS	2,318	100	1993	2,318	194,744
FOP	150	30	1993	45	3,781
FOP	150	30	1993	45	3,781
FUS	2,318	100	1993	2,318	194,744
UOP	36	20	1993	7	588
TOTALS	4,972			4,733	397,638

MARKET ADJUSTMENTS

TYPE	MDL	EFF. AREA	TOT ADJ PTS	EFF. BASE RATE	REPL. COST NEW	AYB	EYB	ECON	FNCT		NORM	% COND
0301	03	4,733	116.2800	98.84	467,810	1974	2004	0	0	0	15.00	85.00

9 APARTMENT – 0% - 2023 Heated Area: 4636 HX Base Yr

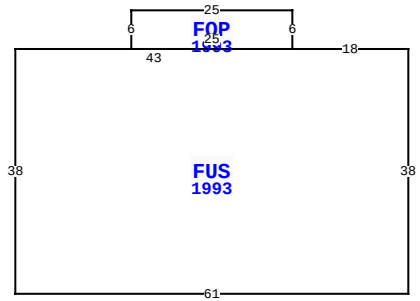

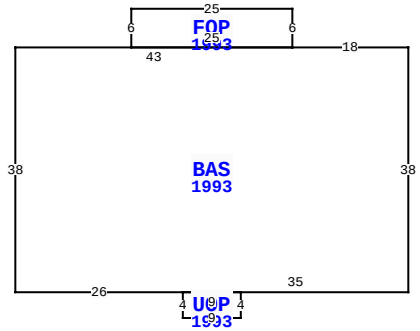

37031 CODY CIR, HILLIARD

BLD DATE	01/13/2021	KK	LGL DATE	
XF DATE	01/13/2021	KK	LAND DATE	01/13/2021 KK
INC DATE	04/22/2025	REA	AG DATE	

VALUATION SUMMARY

VALUATION BY	DIRECT_CAP
Tax Group: 3	Tax Dist:
BUILDING MARKET VALUE	9,860,941
TOTAL MARKET OB/XF VALUE	0
TOTAL LAND VALUE - MARKET	0
TOTAL MARKET VALUE	9,860,941
SOH/AGL Deduction	0
ASSESSED VALUE	9,860,941
TOTAL EXEMPTION VALUE	0
BASE TAXABLE VALUE	9,860,941
TOTAL JUST VALUE	9,860,941
NCON VALUE	0
INCOME VALUE	9,860,941
PREVIOUS YEAR MKT VALUE	10,297,615

PERMIT NUM	DESCRIPTION	AMT	ISSUED

SALES DATA

OFF RECORD Number	DATE	TYPE INST	Q / U	V / I	RSN CD	SALE PRICE
2561/0842	5/06/2022	SW	Q	I	01	13,500,000
GRANTOR: EASTWOOD OAKS LLC						
GRANTEE: EO HILLIARD HOLDING						
2215/0691	7/31/2018	WD	Q	I	01	7,000,000
GRANTOR: EASTWOOD OAKS APARTME						
GRANTEE: EASTWOOD OAKS LLC						

BUILDING NOTES

BUILDING DIMENSIONS

BAS=[YR=1993] W18 FOP=[YR=1993] N6 W25 S6 E25$ W43S38 E26
UOP=[YR=1993] S4 E9 N4 W9$ E35 N38$ PTR=N15 FUS=[YR=1993] N38
W18 FOP=[YR=1993] N6 W25 S6 E25$ W43 S38 E61$ S15$.

EXTRA FEATURES

LN	OB/XF CODE	DESCRIPTION	BLD	CAP	L	W	UNITS	UT	Adj R	ADJ UNIT PRICE	ORIG COND	YEAR ON	YEAR ACTUAL	Q	% COND	OB/XF MKT VALUE	NOTES

LAND DESCRIPTION

TOTAL OB/XF 0

LN	USE CODE	CLS	LAND USE DESCRIPTION	CAP	RD	LOC ZONE	FRONT	DEPTH	TOT LND UTS	UNIT TYPE	DT	DPTH FACT	% COND	TOT ADJ	UNIT PRICE	ADJ UNIT PRICE	LAND VALUE	OTHER ADJUSTMENTS AND NOTES	YEAR	DENSITY	DECL	FRZ	YR	CONSRV

REVIEW DATE 01/13/2021 BY KK Total Acres: 0.00 Total Land Value: 0 Market: 0 Agricultural: 0 Common: 0 PRINTED 07/30/2025 BY SYS

PT OF NW1/4 OF NW1/4 OF
SEC 15-3N-24E IN OR 2561/842
ESMT IN OR 557/520 & UTIL

EO HILLIARD HOLDINGS LLC &/FLORIDA PR LLC & ET AL
13871 CR 1567
ADA, OK 74820

2025

15-3N-24-0000-0002-0030

NASSAU COUNTY PROPERTY

BUILDING CHARACTERISTICS

ELEMENT	CD	CONSTRUCTION
Exterior Wall	20	FACE BRICK 100
Roof Structur	04	WOOD TRUSS 100
Roof Cover	03	COMP SHNGL 100
Interior Wall	05	DRYWALL 100
Interior Floo	14	CARPET 100
Air Condition	03	CENTRAL 100
Heating Type	04	AIR DUCTED 100
Bedrooms		3 100
Bathrooms		2 100
Frame	02	WOOD FRAME 100
Story Height		0 100
RMS		0 100
Units		4 100
BUD8 Adjustme	04	DIST 01 100
Quality	03	Quality Level 03

DOR CODE 0300 MULTI-FAMILY
MAP NUM | MKT AREA 06
NEIGHBORHOOD/LOC 000

AREA TYPE	TOTAL GROSS AREA	PCT OF BASE	YEAR	TOT ADJ AREA	SUBAREA MARKET VALUE
BAS	2,768	100	1993	2,768	234,575
FOP	150	30	1993	45	3,814
FOP	150	30	1993	45	3,814
FOP	190	30	1993	57	4,831
FUS	2,748	100	1993	2,748	232,880
TOTALS	6,006			5,663	479,911

MARKET ADJUSTMENTS

TYPE	MDL	EFF. AREA	TOT ADJ PTS	EFF. BASE RATE	REPL. COST NEW	AYB	EYB	ECON	FNCT		NORM	% COND
0301	03	5,663	117.3000	99.70	564,601	1974	2004	0	0	0	15.00	85.00

10 APARTMENT – 0% - 2023 Heated Area: 5516 HX Base Yr

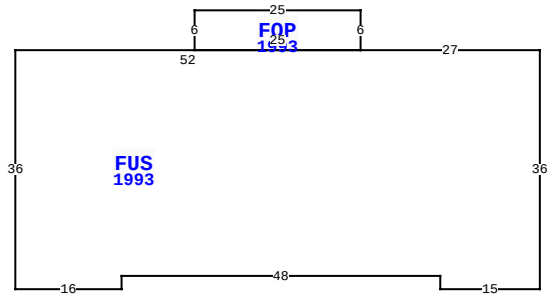

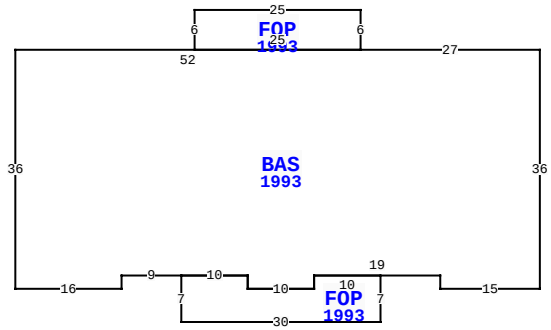

37031 CODY CIR, HILLIARD

BLD DATE	01/13/2021	KK	LGL DATE	
XF DATE	01/13/2021	KK	LAND DATE	01/13/2021 KK
INC DATE	04/22/2025	REA	AG DATE	

VALUATION SUMMARY

VALUATION BY	DIRECT_CAP
Tax Group: 3	Tax Dist:
BUILDING MARKET VALUE	9,860,941
TOTAL MARKET OB/XF VALUE	0
TOTAL LAND VALUE - MARKET	0
TOTAL MARKET VALUE	9,860,941
SOH/AGL Deduction	0
ASSESSED VALUE	9,860,941
TOTAL EXEMPTION VALUE	0
BASE TAXABLE VALUE	9,860,941
TOTAL JUST VALUE	9,860,941
NCON VALUE	0
INCOME VALUE	9,860,941
PREVIOUS YEAR MKT VALUE	10,297,615

PERMIT NUM	DESCRIPTION	AMT	ISSUED

SALES DATA

OFF RECORD Number	DATE	TYPE INST	Q U	V I	RSN CD	SALE PRICE
2561/0842	5/06/2022	SW	Q	I	01	13,500,000
GRANTOR: EASTWOOD OAKS LLC						
GRANTEE: EO HILLIARD HOLDING						
2215/0691	7/31/2018	WD	Q	I	01	7,000,000
GRANTOR: EASTWOOD OAKS APARTME						
GRANTEE: EASTWOOD OAKS LLC						

BUILDING NOTES

BUILDING DIMENSIONS

BAS=[YR=1993] W27 FOP=[YR=1993] N6 W25 S6 E25$ W52S36 E16 N2 E9 FOP=[YR=1993] S7 E30 N7 W10 S2 W10 N2 W10$ E10 S2 E10 N2 E19 S2 E15 N36$ PTR=N15 FUS=[YR=1993] N36 W27 FOP=[YR=1993] N6 W25 S6 E25$ W52 S36 E16 N2 E48 S2 E15$ S15$.

EXTRA FEATURES

LN	OB/XF CODE	DESCRIPTION	BLD	CAP	L	W	UNITS	UT	Adj R	ADJ UNIT PRICE	ORIG COND	YEAR ON	YEAR ACTUAL	Q	% COND	OB/XF MKT VALUE	NOTES

LAND DESCRIPTION

TOTAL OB/XF 0

LN	USE CODE	CLS	LAND USE DESCRIPTION	CAP	RD	LOC ZONE	FRONT	DEPTH	TOT LND UTS	UNIT TYPE	DT	DPTH FACT	% COND	TOT ADJ	UNIT PRICE	ADJ UNIT PRICE	LAND VALUE	OTHER ADJUSTMENTS AND NOTES	YEAR	DENSITY	DECL	FRZ	YR	CONSRV

REVIEW DATE 01/13/2021 BY KK Total Acres: 0.00 Total Land Value: 0 Market: 0 Agricultural: 0 Common: 0 PRINTED 07/30/2025 BY SYS

PT OF NW1/4 OF NW1/4 OF
SEC 15-3N-24E IN OR 2561/842
ESMT IN OR 557/520 & UTIL

EO HILLIARD HOLDINGS LLC &/FLORIDA PR LLC & ET AL
13871 CR 1567
ADA, OK 74820

2025

15-3N-24-0000-0002-0030

NASSAU COUNTY PROPERTY

BUILDING CHARACTERISTICS

ELEMENT	CD	CONSTRUCTION
Exterior Wall	20	FACE BRICK 100
Roof Structur	04	WOOD TRUSS 100
Roof Cover	03	COMP SHNGL 100
Interior Wall	05	DRYWALL 100
Interior Floo	14	CARPET 100
Air Condition	03	CENTRAL 100
Heating Type	04	AIR DUCTED 100
Bedrooms		3 100
Bathrooms		2 100
Frame	02	WOOD FRAME 100
Story Height		0 100
RMS		0 100
Units		8 100
BUD8 Adjustme	04	DIST 01 100
Quality	03	Quality Level 03
DOR CODE	0300	MULTI-FAMILY
MAP NUM		MKT AREA 06
NEIGHBORHOOD/LOC	000	

AREA TYPE	TOTAL GROSS AREA	PCT OF BASE	YEAR	TOT ADJ AREA	SUBAREA MARKET VALUE
BAS	5,506	100	1993	5,506	452,894
FOP	150	30	1993	45	3,702
FOP	150	30	1993	45	3,702
FOP	150	30	1993	45	3,702
FOP	150	30	1993	45	3,702
FOP	190	30	1993	57	4,689
FOP	190	30	1993	57	4,689
FUS	5,466	100	1993	5,466	449,603
TOTALS	11,952			11,266	926,679

MARKET ADJUSTMENTS

TYPE	MDL	EFF. AREA	TOT ADJ PTS	EFF. BASE RATE	REPL. COST NEW	AYB	EYB	ECON	FNCT		NORM	% COND
0301	03	11,266	113.8500	96.77	1,090,211	1974	2004	0	0	0	15.00	85.00

11 APARTMENT – 0% - 2023 Heated Area: 10972 HX Base Yr

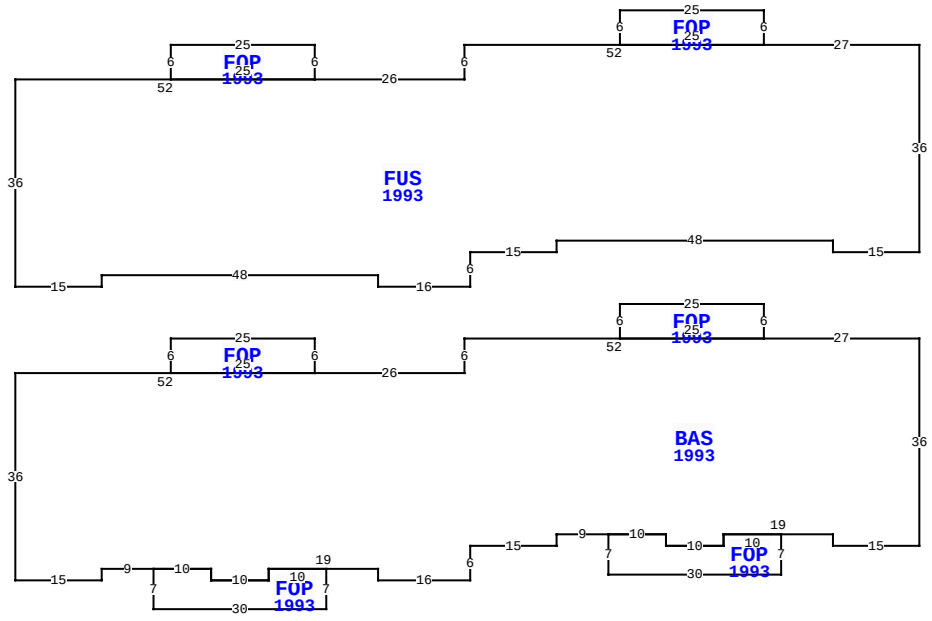

37031 CODY CIR, HILLIARD

BLD DATE	01/13/2021	KK	LGL DATE	
XF DATE	01/13/2021	KK	LAND DATE	01/13/2021 KK
INC DATE	04/22/2025	REA	AG DATE	

VALUATION SUMMARY

VALUATION BY	DIRECT_CAP
Tax Group: 3	Tax Dist:
BUILDING MARKET VALUE	9,860,941
TOTAL MARKET OB/XF VALUE	0
TOTAL LAND VALUE - MARKET	0
TOTAL MARKET VALUE	9,860,941
SOH/AGL Deduction	0
ASSESSED VALUE	9,860,941
TOTAL EXEMPTION VALUE	0
BASE TAXABLE VALUE	9,860,941
TOTAL JUST VALUE	9,860,941
NCON VALUE	0
INCOME VALUE	9,860,941
PREVIOUS YEAR MKT VALUE	10,297,615

PERMIT NUM	DESCRIPTION	AMT	ISSUED

SALES DATA

OFF RECORD Number	DATE	TYPE INST	Q U	V I	RSN CD	SALE PRICE
2561/0842	5/06/2022	SW	Q	I	01	13,500,000
GRANTOR: EASTWOOD OAKS LLC						
GRANTEE: EO HILLIARD HOLDING						
2215/0691	7/31/2018	WD	Q	I	01	7,000,000
GRANTOR: EASTWOOD OAKS APARTME						
GRANTEE: EASTWOOD OAKS LLC						

BUILDING NOTES

BUILDING DIMENSIONS

BAS=[YR=1993] W27 FOP=[YR=1993] N6 W25 S6 E25$ W52S6 W26 FOP=[YR=1993] N6 W25 S6 E25$ W52 S36 E15 N2 E9 FOP=[YR=1993] S7 E30 N7 W10 S2 W10 N2 W10$ E10 S2 E10 N2E19 S2 E16 N6 E15 N2 E9 FOP=[YR=1993] S7E30 N7 W10 S2 W10 N2 W10$ E10 S2 E10 N2 E19 S2 E15 N36$ PTR=N15 FUS=[YR=1993] N36 W27 FOP=[YR=1993] N6 W25 S6 E25$ W52 S6 W26 FOP=[YR=1993] N6 W25 S6 E25$ W52 S36 E15 N2 E48 S2 E16 N6 E15 N2 E48 S2 E15$ S15$.

EXTRA FEATURES

L N	OB/XF CODE	DESCRIPTION	BLD	CAP	L	W	UNITS	UT	Adj R	ADJ UNIT PRICE	ORIG COND	YEAR ON	YEAR ACTUAL	Q	% COND	OB/XF MKT VALUE	NOTES

LAND DESCRIPTION

TOTAL OB/XF 0

L N	USE CODE	CLS	LAND USE DESCRIPTION	CAP	R D	LOC ZONE	FRONT	DEPTH	TOT LND UTS	UNIT TYPE	D T	DPTH FACT	% COND	TOT ADJ	UNIT PRICE	ADJ UNIT PRICE	LAND VALUE	OTHER ADJUSTMENTS AND NOTES	YEAR	DENSITY	DECL	FRZ	YR	CONSRV

REVIEW DATE 01/13/2021 BY KK Total Acres: 0.00 Total Land Value: 0 Market: 0 Agricultural: 0 Common: 0 PRINTED 07/30/2025 BY SYS

PT OF NW1/4 OF NW1/4 OF
SEC 15-3N-24E IN OR 2561/842
ESMT IN OR 557/520 & UTIL

EO HILLIARD HOLDINGS LLC &/FLORIDA PR LLC & ET AL
13871 CR 1567
ADA, OK 74820

2025

15-3N-24-0000-0002-0030

NASSAU COUNTY PROPERTY

BUILDING CHARACTERISTICS

ELEMENT	CD	CONSTRUCTION
Exterior Wall	20	FACE BRICK 100
Roof Structur	04	WOOD TRUSS 100
Roof Cover	03	COMP SHNGL 100
Interior Wall	05	DRYWALL 100
Interior Floo	14	CARPET 100
Air Condition	03	CENTRAL 100
Heating Type	04	AIR DUCTED 100
Bedrooms		3 100
Bathrooms		2 100
Frame	02	WOOD FRAME 100
Story Height		0 100
RMS		0 100
Units		8 100
BUD8 Adjustme	04	DIST 01 100
Quality	03	Quality Level 03

DOR CODE 0300 MULTI-FAMILY
MAP NUM | MKT AREA 06
NEIGHBORHOOD/LOC 000

AREA TYPE	TOTAL GROSS AREA	PCT OF BASE	YEAR	TOT ADJ AREA	SUBAREA MARKET VALUE
BAS	5,536	100	1993	5,536	455,361
FOP	150	30	1993	45	3,702
FOP	150	30	1993	45	3,702
FOP	150	30	1993	45	3,702
FOP	150	30	1993	45	3,702
FOP	190	30	1993	57	4,689
FOP	190	30	1993	57	4,689
FUS	5,496	100	1993	5,496	452,071
TOTALS	12,012			11,326	931,614

MARKET ADJUSTMENTS

TYPE	MDL	EFF. AREA	TOT ADJ PTS	EFF. BASE RATE	REPL. COST NEW	AYB	EYB	ECON	FNCT		NORM	% COND
0301	03	11,326	113.8500	96.77	1,096,017	1974	2004	0	0	0	15.00	85.00

12 APARTMENT – 0% - 2023 Heated Area: 11032 HX Base Yr

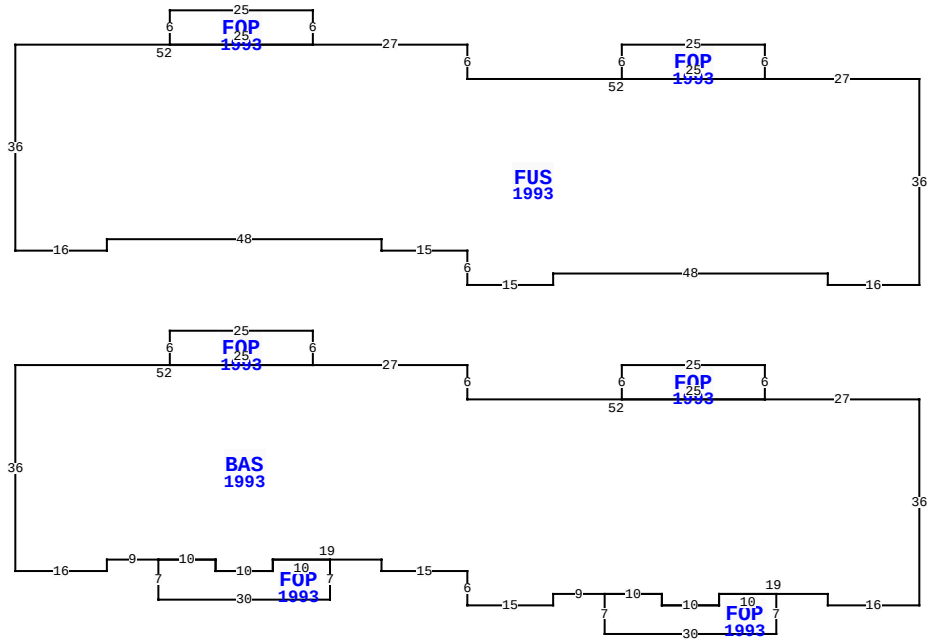

37031 CODY CIR, HILLIARD

BLD DATE	01/13/2021	KK	LGL DATE	
XF DATE	01/13/2021	KK	LAND DATE	01/13/2021 KK
INC DATE	04/22/2025	REA	AG DATE	

VALUATION SUMMARY

VALUATION BY	DIRECT_CAP
Tax Group: 3	Tax Dist:
BUILDING MARKET VALUE	9,860,941
TOTAL MARKET OB/XF VALUE	0
TOTAL LAND VALUE - MARKET	0
TOTAL MARKET VALUE	9,860,941
SOH/AGL Deduction	0
ASSESSED VALUE	9,860,941
TOTAL EXEMPTION VALUE	0
BASE TAXABLE VALUE	9,860,941
TOTAL JUST VALUE	9,860,941
NCON VALUE	0
INCOME VALUE	9,860,941
PREVIOUS YEAR MKT VALUE	10,297,615

PERMIT NUM	DESCRIPTION	AMT	ISSUED

SALES DATA

OFF RECORD Number	DATE	TYPE INST	Q U	V I	RSN CD	SALE PRICE
2561/0842	5/06/2022	SW	Q	I	01	13,500,000
GRANTOR: EASTWOOD OAKS LLC						
GRANTEE: EO HILLIARD HOLDING						
2215/0691	7/31/2018	WD	Q	I	01	7,000,000
GRANTOR: EASTWOOD OAKS APARTME						
GRANTEE: EASTWOOD OAKS LLC						

BUILDING NOTES

BUILDING DIMENSIONS

BAS=[YR=1993] W27 FOP=[YR=1993] N6 W25 S6 E25$ W52N6 W27 FOP=[YR=1993] N6 W25 S6 E25$ W52 S36 E16 N2 E9 FOP=[YR=1993] S7 E30 N7 W10 S2 W10 N2 W10$ E10 S2 E10 N2 E19 S2 E15 S6 E15 N2 E9 FOP=[YR=1993] S7 E30 N7 W10 S2 W10 N2 W10$ E10 S2 E10 N2 E19 S2 E16 N36$ PTR= N20 FUS=[YR=1993] N36 W27 FOP=[YR=1993] N6 W25 S6 E25$ W52 N6 W27 FOP=[YR=1993] N6 W25 S6 E25$ W52 S36 E16 N2 E48 S2 E15 S6 E15 N2 E48 S2 E16$ S20$.

EXTRA FEATURES

L N	OB/XF CODE	DESCRIPTION	BLD	CAP	L	W	UNITS	UT	Adj R	ADJ UNIT PRICE	ORIG COND	YEAR ON	YEAR ACTUAL	Q	% COND	OB/XF MKT VALUE	NOTES

LAND DESCRIPTION

TOTAL OB/XF 0

L N	USE CODE	CLS	LAND USE DESCRIPTION	CAP	R D	LOC ZONE	FRONT	DEPTH	TOT LND UTS	UNIT TYPE	D T	DPTH FACT	% COND	TOT ADJ	UNIT PRICE	ADJ UNIT PRICE	LAND VALUE	OTHER ADJUSTMENTS AND NOTES	YEAR	DENSITY	DECL	FRZ	YR	CONSRV

REVIEW DATE 01/13/2021 BY KK Total Acres: 0.00 Total Land Value: 0 Market: 0 Agricultural: 0 Common: 0 PRINTED 07/30/2025 BY SYS

PT OF NW1/4 OF NW1/4 OF
SEC 15-3N-24E IN OR 2561/842
ESMT IN OR 557/520 & UTIL

EO HILLIARD HOLDINGS LLC &/FLORIDA PR LLC & ET AL
13871 CR 1567
ADA, OK 74820

2025

15-3N-24-0000-0002-0030

NASSAU COUNTY PROPERTY

BUILDING CHARACTERISTICS

ELEMENT	CD	CONSTRUCTION
Exterior Wall	20	FACE BRICK 100
Roof Structur	04	WOOD TRUSS 100
Roof Cover	03	COMP SHNGL 100
Interior Wall	05	DRYWALL 100
Interior Floo	14	CARPET 100
Air Condition	03	CENTRAL 100
Heating Type	04	AIR DUCTED 100
Bedrooms		3 100
Bathrooms		2 100
Frame	02	WOOD FRAME 100
Story Height		0 100
RMS		0 100
Units		8 100
BUD8 Adjustme	04	DIST 01 100
Quality	03	Quality Level 03

DOR CODE 0300 MULTI-FAMILY
MAP NUM | MKT AREA 06
NEIGHBORHOOD/LOC 000

AREA TYPE	TOTAL GROSS AREA	PCT OF BASE	YEAR	TOT ADJ AREA	SUBAREA MARKET VALUE
BAS	5,506	100	1993	5,506	452,894
FOP	150	30	1993	45	3,702
FOP	150	30	1993	45	3,702
FOP	190	30	1993	57	4,689
FOP	190	30	1993	57	4,689
FOP	150	30	1999	45	3,702
FOP	150	30	1999	45	3,702
FUS	5,466	100	1993	5,466	449,603
TOTALS	11,952			11,266	926,679

MARKET ADJUSTMENTS

TYPE	MDL	EFF. AREA	TOT ADJ PTS	EFF. BASE RATE	REPL. COST NEW	AYB	EYB	ECON	FNCT		NORM	% COND
0301	03	11,266	113.8500	96.77	1,090,211	1974	2004	0	0	0	15.00	85.00

13 APARTMENT – 0% - 2023 Heated Area: 10972 HX Base Yr

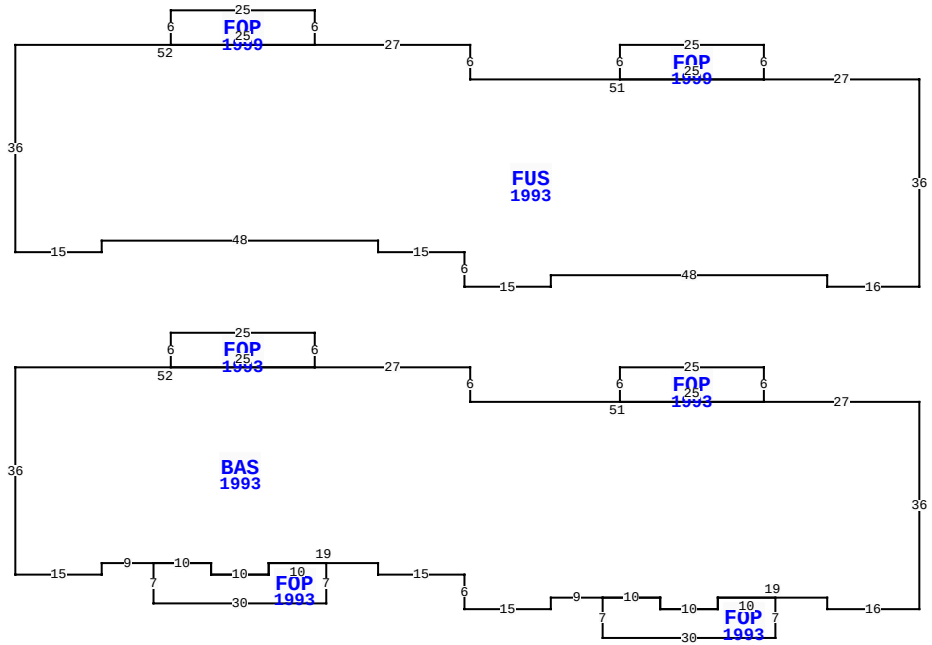

37031 CODY CIR, HILLIARD

BLD DATE	01/13/2021	KK	LGL DATE	
XF DATE	01/13/2021	KK	LAND DATE	01/13/2021 KK
INC DATE	04/22/2025	REA	AG DATE	

VALUATION SUMMARY

VALUATION BY	DIRECT_CAP
Tax Group: 3	Tax Dist:
BUILDING MARKET VALUE	9,860,941
TOTAL MARKET OB/XF VALUE	0
TOTAL LAND VALUE - MARKET	0
TOTAL MARKET VALUE	9,860,941
SOH/AGL Deduction	0
ASSESSED VALUE	9,860,941
TOTAL EXEMPTION VALUE	0
BASE TAXABLE VALUE	9,860,941
TOTAL JUST VALUE	9,860,941
NCON VALUE	0
INCOME VALUE	9,860,941
PREVIOUS YEAR MKT VALUE	10,297,615

PERMIT NUM	DESCRIPTION	AMT	ISSUED

SALES DATA

OFF RECORD Number	DATE	TYPE INST	Q U	V I	RSN CD	SALE PRICE
2561/0842	5/06/2022	SW	Q	I	01	13,500,000
GRANTOR: EASTWOOD OAKS LLC						
GRANTEE: EO HILLIARD HOLDING						
2215/0691	7/31/2018	WD	Q	I	01	7,000,000
GRANTOR: EASTWOOD OAKS APARTME						
GRANTEE: EASTWOOD OAKS LLC						

BUILDING NOTES

BUILDING DIMENSIONS

BAS=[YR=1993] W27 FOP=[YR=1993] N6 W25 S6 E25$ W51N6 W27 FOP=[YR=1993] N6 W25 S6 E25$ W52 S36 E15 N2 E9 FOP=[YR=1993] S7 E30 N7 W10 S2 W10 N2 W10$ E10 S2 E10 N2 E19 S2 E15 S6 E15 N2 E9 FOP=[YR=1993] S7 E30 N7 W10 S2 W10 N2 W10$ E10 S2 E10 N2 E19 S2 E16 N36$ PTR= N20 FUS=[YR=1993] N36 W27 FOP=[YR=1999] N6 W25 S6 E25$ W51 N6 W27 FOP=[YR=1999] N6 W25 S6 E25$ W52 S36 E15 N2 E48 S2 E15 S6 E15 N2 E48 S2 E16$ S20$.

EXTRA FEATURES

LN	OB/XF CODE	DESCRIPTION	BLD	CAP	L	W	UNITS	UT	Adj R	ADJ UNIT PRICE	ORIG COND	YEAR ON	YEAR ACTUAL	Q	% COND	OB/XF MKT VALUE	NOTES

LAND DESCRIPTION

TOTAL OB/XF 0

LN	USE CODE	CLS	LAND USE DESCRIPTION	CAP	RD	LOC ZONE	FRONT	DEPTH	TOT LND UTS	UNIT TYPE	DT	DPTH FACT	% COND	TOT ADJ	UNIT PRICE	ADJ UNIT PRICE	LAND VALUE	OTHER ADJUSTMENTS AND NOTES	YEAR	DENSITY	DECL	FRZ	YR	CONSRV

REVIEW DATE 01/13/2021 BY KK Total Acres: 0.00 Total Land Value: 0 Market: 0 Agricultural: 0 Common: 0 PRINTED 07/30/2025 BY SYS

PT OF NW1/4 OF NW1/4 OF
SEC 15-3N-24E IN OR 2561/842
ESMT IN OR 557/520 & UTIL

EO HILLIARD HOLDINGS LLC &/FLORIDA PR LLC & ET AL
13871 CR 1567
ADA, OK 74820

2025

15-3N-24-0000-0002-0030

BUILDING CHARACTERISTICS

ELEMENT	CD	CONSTRUCTION
Exterior Wall	20	FACE BRICK 100
Roof Structur	04	WOOD TRUSS 100
Roof Cover	03	COMP SHNGL 100
Interior Wall	05	DRYWALL 100
Interior Floo	14	CARPET 100
Air Condition	03	CENTRAL 100
Heating Type	04	AIR DUCTED 100
Bedrooms		1 100
Bathrooms		1 100
Frame	02	WOOD FRAME 100
Story Height		0 100
RMS		0 100
Units		16 100
BUD8 Adjustme	04	DIST 01 100
Quality	03	Quality Level 03
DOR CODE	0300	MULTI-FAMILY
MAP NUM		MKT AREA 06
NEIGHBORHOOD/LOC	000	

AREA TYPE	TOTAL GROSS AREA	PCT OF BASE	YEAR	TOT ADJ AREA	SUBAREA MARKET VALUE
BAS	6,894	100	1993	6,894	536,298
FOP	36	30	1993	11	856
FOP	36	30	1993	11	856
FOP	36	30	1993	11	856
FOP	132	30	1993	40	3,112
FOP	132	30	1993	40	3,112
FOP	132	30	1993	40	3,112
FOP	132	30	1993	40	3,112
FOP	138	30	1993	41	3,189
FOP	138	30	1993	41	3,189
TOTALS	14,961			14,122	1,098,578

MARKET ADJUSTMENTS

TYPE	MDL	EFF. AREA	TOT ADJ PTS	EFF. BASE RATE	REPL. COST NEW	AYB	EYB	ECON	FNCT		NORM	% COND
0301	03	14,122	107.6700	91.52	1,292,445	1974	2004	0	0	0	15.00	85.00

14 APARTMENT – 0% - 2023 Heated Area: 13761 HX Base Yr

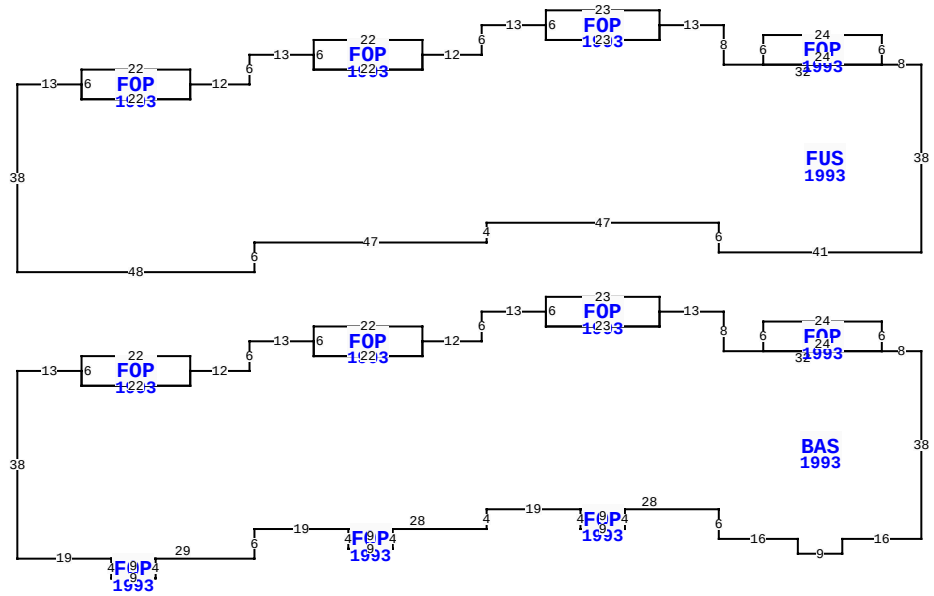

** This building has 13 Sub-Areas

37031 CODY CIR, HILLIARD

BLD DATE	01/13/2021	KK	LGL DATE	
XF DATE	01/13/2021	KK	LAND DATE	01/13/2021 KK
INC DATE	04/22/2025	REA	AG DATE	

NASSAU COUNTY PROPERTY

PAGE 14 of 15 3

VALUATION SUMMARY

VALUATION BY	DIRECT_CAP
Tax Group: 3	Tax Dist:
BUILDING MARKET VALUE	9,860,941
TOTAL MARKET OB/XF VALUE	0
TOTAL LAND VALUE - MARKET	0
TOTAL MARKET VALUE	9,860,941
SOH/AGL Deduction	0
ASSESSED VALUE	9,860,941
TOTAL EXEMPTION VALUE	0
BASE TAXABLE VALUE	9,860,941
TOTAL JUST VALUE	9,860,941
NCON VALUE	0
INCOME VALUE	9,860,941
PREVIOUS YEAR MKT VALUE	10,297,615

PERMIT NUM	DESCRIPTION	AMT	ISSUED

SALES DATA

OFF RECORD Number	DATE	TYPE INST	Q / U	V / I	RSN CD	SALE PRICE
2561/0842	5/06/2022	SW	Q	I	01	13,500,000
GRANTOR: EASTWOOD OAKS LLC						
GRANTEE: EO HILLIARD HOLDING						
2215/0691	7/31/2018	WD	Q	I	01	7,000,000
GRANTOR: EASTWOOD OAKS APARTME						
GRANTEE: EASTWOOD OAKS LLC						

BUILDING NOTES

BUILDING DIMENSIONS

BAS=[YR=1993] W8 FOP=[YR=1993] N6 W24 S6 E24$ W32 N8 W13
FOP=[YR=1993] N3 W23 S6 E23 N3$ S3 W23 N3 W13 S6 W12
FOP=[YR=1993] N3 W22 S6 E22 N3$ S3 W22 N3 W13 S6 W12
FOP=[YR=1993] N3 W22 S6 E22 N3$ S3 W22 N3 W13 S38 E19
FOP=[YR=1993] S4 E9 N4 W9$ E29 N6 E19 FOP=[YR=1993] S4 E9N4
W9$ E28 N4 E19 FOP=[YR=1993] S4 E9 N4W9$ E28 S6 E16 S3 E9 N3
E16 N38$ PTR=N20 FUS=[YR=1993] N38 W8 FOP=[YR=1993] N6W24 S6
E24$ W32 N8 W13 FOP=[YR=1993] N3 W23S6E23N3$S3
W23N3W13S6W12FOP=[YR=1993] N3 W22S6 E22N3$S3W22N3W13S6W12
FOP=[YR=1993] N3W22S6E22N3$S3W22N3W13 S38E48
N6E47N4E47S6E41$S20$.

EXTRA FEATURES

L N	OB/XF CODE	DESCRIPTION	BLD	CAP	L	W	UNITS	UT	Adj R	ADJ UNIT PRICE	ORIG COND	YEAR ON	YEAR ACTUAL	Q	% COND	OB/XF MKT VALUE	NOTES

LAND DESCRIPTION

TOTAL OB/XF 0

L N	USE CODE	CLS	LAND USE DESCRIPTION	CAP	R D	LOC ZONE	FRONT	DEPTH	TOT LND UTS	UNIT TYPE	D T	DPTH FACT	% COND	TOT ADJ	UNIT PRICE	ADJ UNIT PRICE	LAND VALUE	OTHER ADJUSTMENTS AND NOTES	YEAR	DENSITY	DECL	FRZ	YR	CONSRV

REVIEW DATE 01/13/2021 BY KK Total Acres: 0.00 Total Land Value: 0 Market: 0 Agricultural: 0 Common: 0 PRINTED 07/30/2025 BY SYS

PT OF NW1/4 OF NW1/4 OF
SEC 15-3N-24E IN OR 2561/842
ESMT IN OR 557/520 & UTIL

EO HILLIARD HOLDINGS LLC &/FLORIDA PR LLC & ET AL
13871 CR 1567
ADA, OK 74820

2025

15-3N-24-0000-0002-0030

BUILDING CHARACTERISTICS

ELEMENT	CD	CONSTRUCTION
Exterior Wall	20	FACE BRICK 100
Roof Structur	04	WOOD TRUSS 100
Roof Cover	03	COMP SHNGL 100
Interior Wall	05	DRYWALL 100
Interior Floo	14	CARPET 100
Air Condition	03	CENTRAL 100
Heating Type	04	AIR DUCTED 100
Bedrooms		2 100
Bathrooms		2 100
Frame	02	WOOD FRAME 100
Story Height		0 100
RMS		0 100
Units		4 100
BUD8 Adjustme	04	DIST 01 100
Quality	03	Quality Level 03

DOR CODE 0300 MULTI-FAMILY
MAP NUM | MKT AREA 06
NEIGHBORHOOD/LOC 000

AREA TYPE	TOTAL GROSS AREA	PCT OF BASE	YEAR	TOT ADJ AREA	SUBAREA MARKET VALUE
BAS	2,318	100	1993	2,318	194,744
FOP	150	30	1993	45	3,781
FOP	150	30	1993	45	3,781
FUS	2,318	100	1993	2,318	194,744
UOP	36	20	1993	7	588
TOTALS	4,972			4,733	397,638

MARKET ADJUSTMENTS

TYPE	MDL	EFF. AREA	TOT ADJ PTS	EFF. BASE RATE	REPL. COST NEW	AYB	EYB	ECON	FNCT		NORM	% COND
0301	03	4,733	116.2800	98.84	467,810	1974	2004	0	0	0	15.00	85.00

15 APARTMENT – 0% - 2023 Heated Area: 4636 HX Base Yr

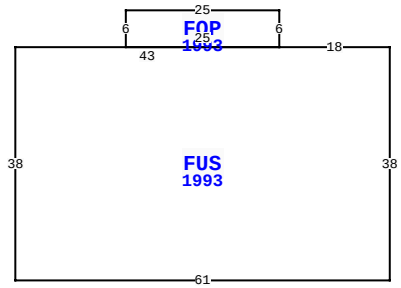

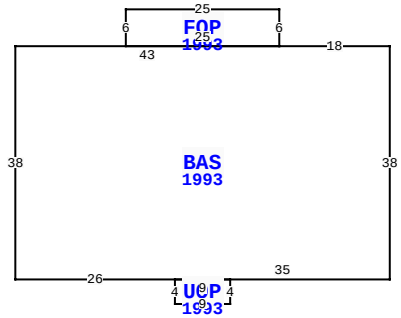

37031 CODY CIR, HILLIARD

BLD DATE	01/13/2021	KK	LGL DATE	
XF DATE	01/13/2021	KK	LAND DATE	01/13/2021 KK
INC DATE	04/22/2025	REA	AG DATE	

NASSAU COUNTY PROPERTY

PAGE 15 of 15 3

VALUATION SUMMARY

VALUATION BY	DIRECT_CAP
Tax Group: 3	Tax Dist:
BUILDING MARKET VALUE	9,860,941
TOTAL MARKET OB/XF VALUE	0
TOTAL LAND VALUE - MARKET	0
TOTAL MARKET VALUE	9,860,941
SOH/AGL Deduction	0
ASSESSED VALUE	9,860,941
TOTAL EXEMPTION VALUE	0
BASE TAXABLE VALUE	9,860,941
TOTAL JUST VALUE	9,860,941
NCON VALUE	0
INCOME VALUE	9,860,941
PREVIOUS YEAR MKT VALUE	10,297,615

PERMIT NUM	DESCRIPTION	AMT	ISSUED

SALES DATA

OFF RECORD Number	DATE	TYPE INST	Q / U	V / I	RSN CD	SALE PRICE
2561/0842	5/06/2022	SW	Q	I	01	13,500,000
GRANTOR: EASTWOOD OAKS LLC						
GRANTEE: EO HILLIARD HOLDING						
2215/0691	7/31/2018	WD	Q	I	01	7,000,000
GRANTOR: EASTWOOD OAKS APARTME						
GRANTEE: EASTWOOD OAKS LLC						

BUILDING NOTES

BUILDING DIMENSIONS

BAS=[YR=1993] W18 FOP=[YR=1993] N6 W25 S6 E25$ W43S38 E26
UOP=[YR=1993] S4 E9 N4 W9$ E35 N38$ PTR=N20 FUS=[YR=1993] N38
W18 FOP=[YR=1993] N6 W25 S6 E25$ W43 S38 E61$ S20$.

EXTRA FEATURES

L N	OB/XF CODE	DESCRIPTION	BLD	CAP	L	W	UNITS	UT	Adj R	ADJ UNIT PRICE	ORIG COND	YEAR ON	YEAR ACTUAL	Q	% COND	OB/XF MKT VALUE	NOTES

LAND DESCRIPTION

TOTAL OB/XF 0

L N	USE CODE	CLS	LAND USE DESCRIPTION	CAP	R D	LOC ZONE	FRONT	DEPTH	TOT LND UTS	UNIT TYPE	D T	DPTH FACT	% COND	TOT ADJ	UNIT PRICE	ADJ UNIT PRICE	LAND VALUE	OTHER ADJUSTMENTS AND NOTES	YEAR	DENSITY	DECL	FRZ	YR	CONSRV

REVIEW DATE 01/13/2021 BY KK Total Acres: 0.00 Total Land Value: 0 Market: 0 Agricultural: 0 Common: 0 PRINTED 07/30/2025 BY SYS