SUB LOT 32
IN OR 2621/1561
SUB OF GOVT LOT 9 UNR

NELSON CHARLES G & SUSAN B L/E/
75346 EDWARDS ROAD
YULEE, FL 32097

2025

14-2N-26-4280-0012-0000

NASSAU COUNTY PROPERTY

BUILDING CHARACTERISTICS

ELEMENT	CD	CONSTRUCTION
Exterior Wall	05	AVERAGE 100
Roof Structur	03	GABLE/HIP 100
Roof Cover	03	COMP SHNGL 100
Interior Wall	05	DRYWALL 100
Interior Floo	14	CARPET 80
Interior Floo	08	SHT VINYL 20
Air Condition	02	WINDOW 100
Heating Type	04	AIR DUCTED 100
Bedrooms		3 100
Bathrooms		2 100
Frame	02	WOOD FRAME 100
Stories	2.	2. 100
Units		0 100
BUD8 Adjustme	04	DIST 01 100
Occupancy	00	NONE 100
Quality	03	Quality Level 03
DOR CODE	0100	SINGLE FAMILY
MAP NUM		MKT AREA 05
NEIGHBORHOOD/LOC	5001.00	

AREA TYPE	TOTAL GROSS AREA	PCT OF BASE	YEAR	TOT ADJ AREA	SUBAREA MARKET VALUE
BAL	144	15	2012	22	1,799
BAS	874	100	1993	874	71,450
BAS	360	100	1997	360	29,430
FOP	24	30	1997	7	572
FUS	396	100	1997	396	32,373
UDU	220	55	1997	121	9,892
UOP	144	20	1997	29	2,371
UOP	160	20	1997	32	2,616
TOTALS	2,322			1,841	150,502

MARKET ADJUSTMENTS

TYPE	MDL	EFF. AREA	TOT ADJ PTS	EFF. BASE RATE	REPL. COST NEW	AYB	EYB	ECON	FNCT		NORM	% COND
0100	01	1,841	100.0000	100.00	184,100	1962	1980	0	0	0	18.25	81.75

1 SINGLE FAM – 100% - 1986 Heated Area: 1630 HX Base Yr 1986

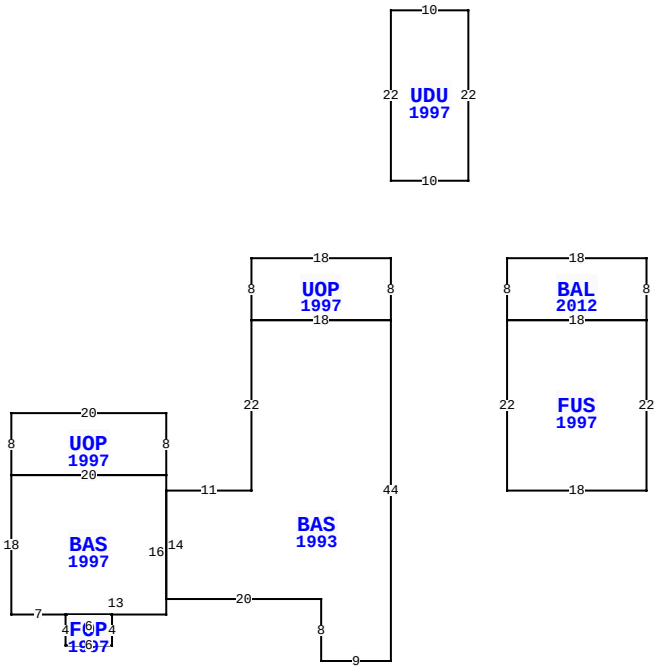

75346 EDWARDS RD, YULEE

BLD DATE		LGL DATE	
XF DATE		LAND DATE	
INC DATE		AG DATE	

NASSAU COUNTY PROPERTY — VALUATION SUMMARY

VALUATION BY		STANDARD
Tax Group: 4	Tax Dist:	
BUILDING MARKET VALUE		150,502
TOTAL MARKET OB/XF VALUE		25,164
TOTAL LAND VALUE - MARKET		200,000
TOTAL MARKET VALUE		375,666
SOH/AGL Deduction		243,781
ASSESSED VALUE		131,885
TOTAL EXEMPTION VALUE	HX HB	50,722
BASE TAXABLE VALUE		81,163
TOTAL JUST VALUE		375,666
NCON VALUE		0
INCOME VALUE		
PREVIOUS YEAR MKT VALUE		279,044

PERMIT NUM	DESCRIPTION	AMT	ISSUED
963221	CHNGE SRVC	0	11/01/1996

SALES DATA

OFF RECORD Number	DATE	TYPE INST	Q / U	V / I	RSN CD	SALE PRICE
2621/1561	2/24/2023	LE	U	I	11	100
GRANTOR: NELSON CHARLES G & SU						
GRANTEE: NELSON THOMAS D & D						
1176/1060	10/01/2003	QC	Q	I	01	100
GRANTOR: NELSON SUSAN B						
GRANTEE: NELSON CHARLES G &						

BUILDING NOTES

BUILDING DIMENSIONS

UOP=[YR=1997] W18 S8 BAS=[YR=1993] S22 W11 BAS=[YR=1997] N2 UOP=[YR=1997] N8 W20 S8 E20$ W20 S18 E7 FOP=[YR=1997] S4 E6 N4 W6$ E13 N16$ S14 E20 S8 E9 N44 W18$ E18 N8$ PTR=E15 BAL=[YR=2012] E18 S8 FUS=[YR=1997] S22 W18 N22 E18$ W18 N8$ W15$ PTR=N10 UDU=[YR=1997] N22 E10 S22 W10$ S10$.

EXTRA FEATURES

LN	OB/XF CODE	DESCRIPTION	BLD	CAP	L	W	UNITS	UT	Adj R	ADJ UNIT PRICE	ORIG COND	YEAR ON	YEAR ACTUAL	Q	% COND	OB/XF MKT VALUE	NOTES
1	0940	SHEDS/PORT	0	100	8	10	80.00	SF	30.00	30.00	100	1982	1982	3	20	480	
2	0500	FP-PRE FAB	0	100	0	0	1.00	UT	3,500.00	3,500.00	100	1997	1997	3	79	2,765	
3	0940	SHEDS/PORT	0	100	8	10	80.00	SF	30.00	30.00	100	1990	1990	3	20	480	
4	0920	CWALL-WD/M	0	100	0	0	97.00	LF	390.00	390.00	100	1990	1990	3	20	7,566	
5	0812	CONCRETE C	0	100	0	0	1,456.00	SF	4.00	4.00	100	1997	1997	3	72	4,193	
6	1242	WD DECK A	0	100	0	0	150.00	SF	10.00	10.00	100	1997	1997	3	20	300	
7	0812	CONCRETE C	0	100	0	0	1,180.00	SF	4.00	4.00	100	1999	1999	3	75	3,540	
8	0351	CARPORT MT	0	100	24	22	528.00	SF	8.50	8.50	100	1999	1999	3	20	898	
9	0300	BOAT DCK W	0	100	6	12	72.00	SF	40.00	40.00	100	2014	2014	3	71	2,045	
10	0300	BOAT DCK W	0	100	6	17	102.00	SF	40.00	40.00	100	2014	2014	3	71	2,897	

LAND DESCRIPTION

TOTAL OB/XF 25,164

LN	USE CODE	CLS	LAND USE DESCRIPTION	CAP	RD	LOC ZONE	FRONT	DEPTH	TOT LND UTS	UNIT TYPE	DT	DPTH FACT	% COND	TOT ADJ	UNIT PRICE	ADJ UNIT PRICE	LAND VALUE	OTHER ADJUSTMENTS AND NOTES	YEAR	DENSITY	DECL	FRZ	YR	CONSRV
1	000131	C	RES CREEK	100		RM	93.00	240.00	1.00	LT		1.00	1.00	1.00	200,000.00	200,000.00	200,000							

REVIEW DATE 05/12/2019 BY KBA Total Acres: 0.00 Total Land Value: 200,000 Market: 0 Agricultural: 0 Common: 200,000 PRINTED 07/30/2025 BY SYS