LOT 1176
TOWN OF CRAWFORD S/D
IN SEC 14-1N-24E

STUTSMAN BRUCE EDWARD & SUSAN ELIZABETH L/E/
33445 CRIPPLE HORSE TRL
CALLAHAN, FL 32011

2025

14-1N-24-2180-1176-0000

NASSAU COUNTY PROPERTY

BUILDING CHARACTERISTICS

ELEMENT	CD	CONSTRUCTION
Exterior Wall	31	HARDIE BRD 90
Exterior Wall	20	FACE BRICK 10
Roof Structur	03	GABLE/HIP 100
Roof Cover	03	COMP SHNGL 100
Interior Wall	05	DRYWALL 100
Interior Floo	13	LVT/LAMNT 70
Interior Floo	14	CARPET 30
Air Condition	03	CENTRAL 100
Heating Type	04	AIR DUCTED 100
Bedrooms		3 100
Bathrooms		2 100
Frame	02	WOOD FRAME 100
Stories	1.5	1.5 100
Units		0 100
Quality	04	Quality Level 04
DOR CODE	5000	IMPROVED AG
MAP NUM		MKT AREA 08
NEIGHBORHOOD/LOC	8005.00	

AREA TYPE	TOTAL GROSS AREA	PCT OF BASE	YEAR	TOT ADJ AREA	SUBAREA MARKET VALUE
BAS	2,228	100	2024	2,228	302,031
FGR	800	55	2024	440	59,647
FOP	204	30	2024	61	8,269
FOP	650	30	2024	195	26,435
FUS	536	100	2024	536	72,661
STR	64	10	2024	6	813
TOTALS	4,482			3,466	469,856

MARKET ADJUSTMENTS

TYPE	MDL	EFF. AREA	TOT ADJ PTS	EFF. BASE RATE	REPL. COST NEW	AYB	EYB	ECON	FNCT		NORM	% COND
0900	01	3,466	102.7824	135.67	470,232	2023	2023	0	0	0	0.08	99.92

1 SNGL FAM – 100% - 2024 Heated Area: 2764 HX Base Yr 2024

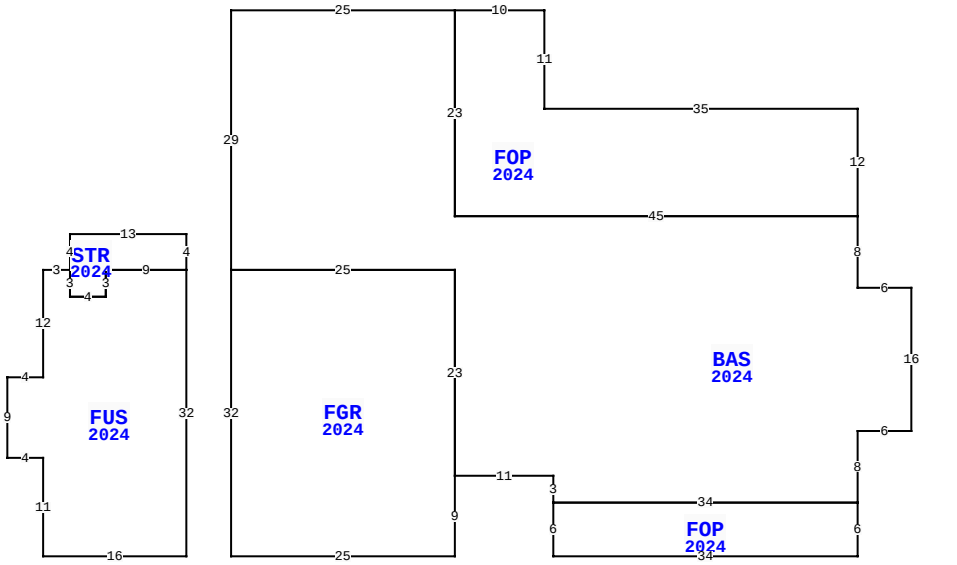

33445 CRIPPLE HORSE TR, CALLAHAN

BLD DATE		LGL DATE	
XF DATE		LAND DATE	05/09/2025 MLU
INC DATE		AG DATE	01/16/2025 KBA

VALUATION SUMMARY

VALUATION BY		STANDARD
Tax Group: 6	Tax Dist:	
BUILDING MARKET VALUE		535,132
TOTAL MARKET OB/XF VALUE		4,030
TOTAL LAND VALUE - MARKET		211,812
TOTAL MARKET VALUE		629,437
SOH/AGL Deduction		226,200
ASSESSED VALUE		403,237
TOTAL EXEMPTION VALUE	HX HB	50,722
BASE TAXABLE VALUE		352,515
TOTAL JUST VALUE		750,974
NCON VALUE		0
INCOME VALUE		
PREVIOUS YEAR MKT VALUE		686,152

PERMIT NUM	DESCRIPTION	AMT	ISSUED
230004429	CO ISSUED		04/05/2023
22004970	NEW CONSTR	496,016	03/31/2022
21013311	GARAGE	50	09/30/2021
20011035	GARAGE	94,185	12/21/2020

SALES DATA

OFF RECORD Number	DATE	TYPE INST	Q U	V I	RSN CD	SALE PRICE
2753/654	12/02/2024	LE	U	I	11	100
GRANTOR: STUTSMAN BRUCE EDWARD						
GRANTEE: WEAVER ELIZABETH A						
2169/1296	1/10/2018	WD	Q	V	02	68,500
GRANTOR: JMC NASSAU COUNTY PRO						
GRANTEE: STUTSMAN BRUCE EDWA						

BUILDING NOTES

BUILDING DIMENSIONS

BAS=[YR=2024;ORIG=75,14] W45 N23 W25 S29 E25 S23 E11 S3 E34 N8 E6 N16 W6 N8 $
FUS=[YR=2024;ORIG=0,20] W9 S3 W4 N3 W3 S12 W4 S9 E4 S11 E16 N32 $
STR=[YR=2024;ORIG=-13,16] E13 S4 W9 S3 W4 N3 N4 $
FGR=[YR=2024;ORIG=5,20] E25 S23 S9 W25 N32 $
FOP=[YR=2024;ORIG=30,-9] E10 S11 E35 S12 W45 N23 $
FOP=[YR=2024;ORIG=41,46] S6 E34 N6 W34 $
.

EXTRA FEATURES

LN	OB/XF CODE	DESCRIPTION	BLD	CAP	L	W	UNITS	UT	Adj R	ADJ UNIT PRICE	ORIG COND	YEAR ON	YEAR ACTUAL	Q	% COND	OB/XF MKT VALUE	NOTES
1	0811	CONCRETE B	2	100	0	0	775.00	SF	5.20	5.20	100	2024	2023		100	4,030	

LAND DESCRIPTION

TOTAL OB/XF 4,030

LN	USE CODE	CLS	LAND USE DESCRIPTION	CAP	RD	LOC ZONE	FRONT	DEPTH	TOT LND UTS	UNIT TYPE	DT	DPTH FACT	% COND	TOT ADJ	UNIT PRICE	ADJ UNIT PRICE	LAND VALUE	OTHER ADJUSTMENTS AND NOTES	YEAR	DENSITY	DECL	FRZ	YR	CONSRV
1	005000	C	AGRICULTURAL	100		OR	0.00	0.00	2.50	AC		1.00	1.00	1.00	35,000.00	35,000.00	87,500							
2	006005	A	PASTURE - GR	0		OR	0.00	0.00	7.50	AC		1.00	1.00	1.00	370.00	370.00	2,775							
3	009910	M	MARKET VALUE	0		OR	0.00	0.00	7.50	AC		1.00	1.00	0.85	19,500.00	16,575.00	124,312							

REVIEW DATE 05/08/2024 BY TWA Total Acres: 10.00 Total Land Value: 90,275 Market: 124,312 Agricultural: 2,775 Common: 87,500 PRINTED 07/30/2025 BY SYS

LOT 1176
TOWN OF CRAWFORD S/D
IN SEC 14-1N-24E

STUTSMAN BRUCE EDWARD & SUSAN ELIZABETH L/E/
33445 CRIPPLE HORSE TRL
CALLAHAN, FL 32011

2025

14-1N-24-2180-1176-0000

BUILDING CHARACTERISTICS

ELEMENT	CD	CONSTRUCTION
Exterior Wall	25	MOD METAL 100
Roof Structur	03	GABLE/HIP 100
Roof Cover	12	MODULAR MT 100
Interior Wall	07	NONE 70
Interior Wall	05	DRYWALL 30
Interior Floo	03	CONC FINSH 100
Air Condition	02	WINDOW 100
Heating Type	03	FORCED AIR 100
Bedrooms		0 100
Bathrooms		1 100
Frame	05	STEEL 100
Stories	0	0 100
Units		0 100
Occupancy	00	NONE 100
Quality	03	Quality Level 03

DOR CODE	5000	IMPROVED AG	
MAP NUM		MKT AREA	08
NEIGHBORHOOD/LOC	8005.00		

AREA TYPE	TOTAL GROSS AREA	PCT OF BASE	YEAR	TOT ADJ AREA	SUBAREA MARKET VALUE
BAS	450	100	2022	450	17,259
UCP	600	20	2022	120	4,603
UCP	600	20	2022	120	4,603
UGR	2,250	45	2022	1,012	38,813
TOTALS	3,900			1,702	65,276

MARKET ADJUSTMENTS

TYPE	MDL	EFF. AREA	TOT ADJ PTS	EFF. BASE RATE	REPL. COST NEW	AYB	EYB	ECON	FNCT		NORM	% COND
0150	01	1,702	73.1000	38.74	65,935	2022	2022	0	0	0	1.00	99.00

2 ACCESORY U – 100% - 2024 Heated Area: 450 HX Base Yr 2024

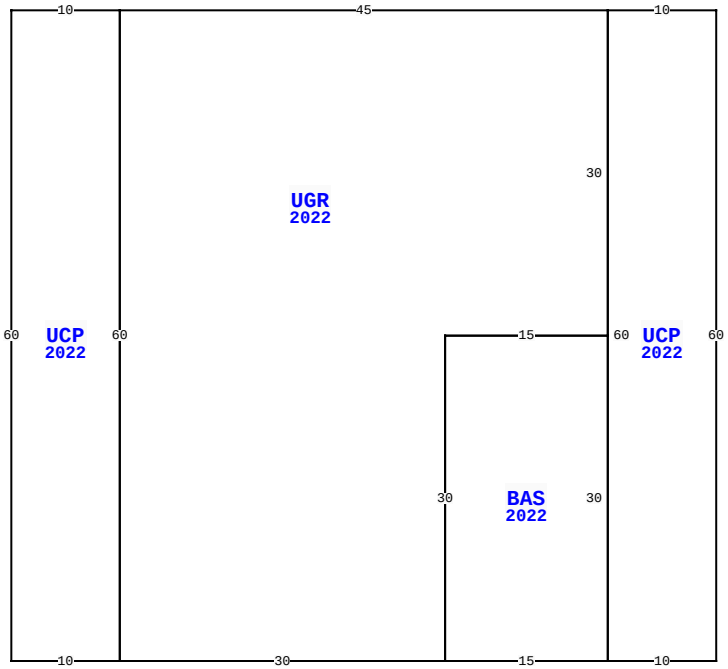

33445 CRIPPLE HORSE TR, CALLAHAN

BLD DATE		LGL DATE	
XF DATE		LAND DATE	05/09/2025 MLU
INC DATE		AG DATE	01/16/2025 KBA

NASSAU COUNTY PROPERTY

PAGE 2 of 2 6

VALUATION SUMMARY

VALUATION BY		STANDARD
Tax Group: 6	Tax Dist:	
BUILDING MARKET VALUE		535,132
TOTAL MARKET OB/XF VALUE		4,030
TOTAL LAND VALUE - MARKET		211,812
TOTAL MARKET VALUE		629,437
SOH/AGL Deduction		226,200
ASSESSED VALUE		403,237
TOTAL EXEMPTION VALUE	HX HB	50,722
BASE TAXABLE VALUE		352,515
TOTAL JUST VALUE		750,974
NCON VALUE		0
INCOME VALUE		
PREVIOUS YEAR MKT VALUE		686,152

PERMIT NUM	DESCRIPTION	AMT	ISSUED

SALES DATA

OFF RECORD Number	DATE	TYPE INST	Q / U	V / I	RSN CD	SALE PRICE
2753/654	12/02/2024	LE	U	I	11	100
GRANTOR: STUTSMAN BRUCE EDWARD						
GRANTEE: WEAVER ELIZABETH A						
2169/1296	1/10/2018	WD	Q	V	02	68,500
GRANTOR: JMC NASSAU COUNTY PRO						
GRANTEE: STUTSMAN BRUCE EDWA						

BUILDING NOTES

BUILDING DIMENSIONS

UCP=[YR=2022] W10 UGR=[YR=2022] W45 UCP=[YR=2022] W10 S60 E10 N60$ S60 E30 BAS=[YR=2022] E15 N30 W15 S30$ N30 E15 N30$ S60 E10 N60$.

EXTRA FEATURES

L N	OB/XF CODE	DESCRIPTION	BLD	CAP	L	W	UNITS	UT	Adj R	ADJ UNIT PRICE	ORIG COND	YEAR ON	YEAR ACTUAL	Q	% COND	OB/XF MKT VALUE	NOTES

LAND DESCRIPTION

TOTAL OB/XF 0

L N	USE CODE	CLS	LAND USE DESCRIPTION	CAP	R D	LOC ZONE	FRONT	DEPTH	TOT LND UTS	UNIT TYPE	D T	DPTH FACT	% COND	TOT ADJ	UNIT PRICE	ADJ UNIT PRICE	LAND VALUE	OTHER ADJUSTMENTS AND NOTES	YEAR	DENSITY	DECL	FRZ	YR	CONSRV

REVIEW DATE 05/08/2024 BY TWA Total Acres: 10.00 Total Land Value: 90,275 Market: 124,312 Agricultural: 2,775 Common: 87,500 PRINTED 07/30/2025 BY SYS