LOTS 41,42 & PT OF LOTS 37,38,
39 & 40 IN OR 1826/1370 &
OR 1870/1329 & OR 1954/963 &

EMERY SANDRA HINSON
27400 BRUSSO FRANKLIN RD
HILLIARD, FL 32046

**2025**

**13-3N-23-2020-0037-0050**

## NASSAU COUNTY PROPERTY



## BUILDING CHARACTERISTICS

| ELEMENT | CD | CONSTRUCTION |
|---|---|---|
| Exterior Wall | 10 | ABOVE AVG 90 |
| Exterior Wall | 20 | FACE BRICK 10 |
| Roof Structur | 08 | IRREGULAR 100 |
| Roof Cover | 03 | COMP SHNGL 100 |
| Interior Wall | 05 | DRYWALL 100 |
| Interior Floo | 12 | HARDWOOD 70 |
| Interior Floo | 11 | CLAY TILE 30 |
| Air Condition | 03 | CENTRAL 100 |
| Heating Type | 04 | AIR DUCTED 100 |
| Bedrooms | | 3 100 |
| Bathrooms | | 3 100 |
| Frame | 02 | WOOD FRAME 100 |
| Stories | 0 | 0 100 |
| Units | | 0 100 |
| Occupancy | 00 | NONE 100 |
| Quality | 04 | Quality Level 04 |

DOR CODE 5500 TIMBERLAND 80-89

MAP NUM | MKT AREA 09

NEIGHBORHOOD/LOC 9001.00

| AREA TYPE | TOTAL GROSS AREA | PCT OF BASE | YEAR | TOT ADJ AREA | SUBAREA MARKET VALUE |
|---|---|---|---|---|---|
| BAS | 1,949 | 100 | 2011 | 1,949 | 275,468 |
| FGR | 814 | 55 | 2011 | 448 | 63,320 |
| FOP | 150 | 30 | 2011 | 45 | 6,361 |
| FSP | 140 | 40 | 2011 | 56 | 7,915 |
| FUS | 750 | 100 | 2011 | 750 | 106,004 |
| PTO | 304 | 5 | 2011 | 15 | 2,120 |
| TOTALS | 4,107 | | | 3,263 | 461,186 |

## MARKET ADJUSTMENTS

| TYPE | MDL | EFF. AREA | TOT ADJ PTS | EFF. BASE RATE | REPL. COST NEW | AYB | EYB | ECON | FNCT | | NORM | % COND |
|---|---|---|---|---|---|---|---|---|---|---|---|---|
| 0900 | 01 | 3,263 | 114.3744 | 150.97 | 492,615 | 2011 | 2011 | 0 | 0 | 0 | 6.38 | 93.62 |

1 SNGL FAM – 100% - 2013 Heated Area: 2699 HX Base Yr 2013

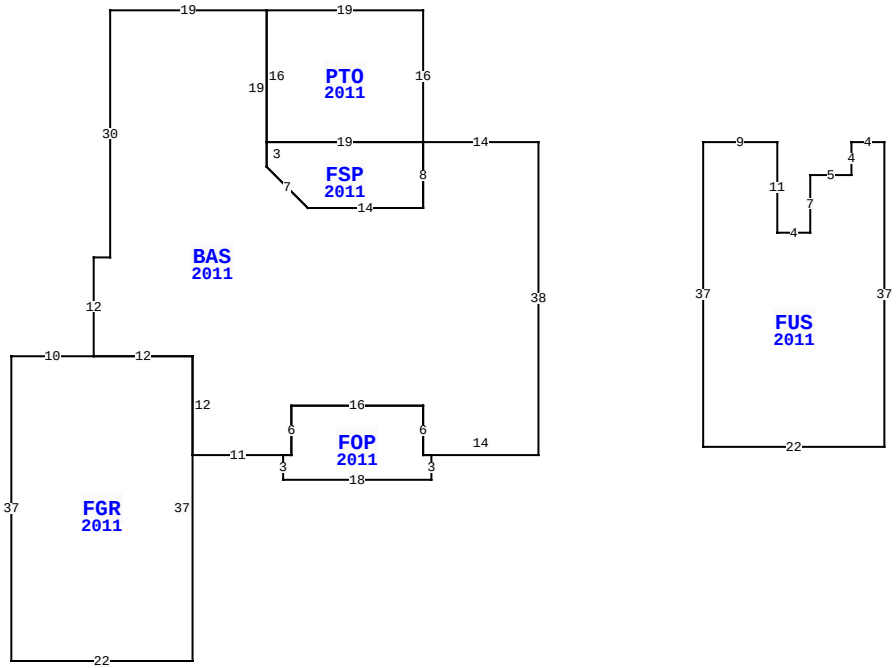


27400 BRUSSO-FRANKLIN RD, HILLIARD

| | | | |
|---|---|---|---|
| BLD DATE | | LGL DATE | |
| XF DATE | | LAND DATE | 05/21/2025 MLU |
| INC DATE | | AG DATE | 11/04/2024 KBA |

## VALUATION SUMMARY

| | | |
|---|---|---|
| VALUATION BY | | STANDARD |
| Tax Group: 4 | Tax Dist: | |
| BUILDING MARKET VALUE | | 461,186 |
| TOTAL MARKET OB/XF VALUE | | 28,490 |
| TOTAL LAND VALUE - MARKET | | 355,320 |
| TOTAL MARKET VALUE | | 562,266 |
| SOH/AGL Deduction | | 172,633 |
| ASSESSED VALUE | | 389,633 |
| TOTAL EXEMPTION VALUE | HX HB | 50,722 |
| BASE TAXABLE VALUE | | 338,911 |
| TOTAL JUST VALUE | | 844,996 |
| NCON VALUE | | 0 |
| INCOME VALUE | | |
| PREVIOUS YEAR MKT VALUE | | 780,833 |

| PERMIT NUM | DESCRIPTION | AMT | ISSUED |
|---|---|---|---|
| B0821954 | NEW CONSTR | 0 | 05/11/2009 |

## SALES DATA

| OFF RECORD Number | DATE | TYPE INST | Q / U | V / I | RSN CD | SALE PRICE |
|---|---|---|---|---|---|---|
| 1826/1370 | 11/21/2012 | WD | Q | I | 02 | 525,000 |
| GRANTOR: B Y FRANKLIN PROPERTI | | | | | | |
| GRANTEE: EMERY SANDRA HINSON | | | | | | |
| 1634/0943 | 6/12/2009 | WD | U | I | 11 | 100 |
| GRANTOR: FRANKLIN BOBBY Y & EM | | | | | | |
| GRANTEE: B Y FRANKLIN PROPER | | | | | | |

## BUILDING NOTES

## EXTRA FEATURES

| LN | OB/XF CODE | DESCRIPTION | BLD | CAP | L | W | UNITS | UT | Adj R | ADJ UNIT PRICE | ORIG COND | YEAR ON | YEAR ACTUAL | Q | % COND | OB/XF MKT VALUE | NOTES |
|---|---|---|---|---|---|---|---|---|---|---|---|---|---|---|---|---|---|
| 1 | 0812 | CONCRETE C | 0 | 100 | 0 | 0 | 1,884.00 | SF | 4.00 | 4.00 | 100 | 2011 | 2011 | 3 | 91 | 6,858 | |
| 2 | 0300 | BOAT DCK W | 0 | 100 | 25 | 10 | 250.00 | SF | 40.00 | 40.00 | 100 | 2012 | 2012 | 3 | 64 | 6,400 | |
| 3 | 0803 | ASPHALT C | 0 | 100 | 1400 | 8 | 11,200.00 | SF | 2.00 | 2.00 | 100 | 2012 | 2012 | 3 | 68 | 15,232 | |

## BUILDING DIMENSIONS

BAS=[YR=2011] W14 PTO=[YR=2011] N16 W19 S16 FSP=[YR=2011] S3 D5 R5 E14 N8 W19$ E19$ S8 W14 U5 L5 N19 W19 S30 W2 S12 FGR=[YR=2011] W10 S37 E22 N37 W12$ E12 S12 E11 FOP=[YR=2011] S3 E18 N3 W1 N6 W16 S6 W1$ E1 N6 E16 S6 E14 N38$ PTR= E20 FUS=[YR=2011] E9 S11 E4 N7 E5 N4 E4 S37 W22 N37$ W20$.

## LAND DESCRIPTION

TOTAL OB/XF 28,490

| LN | USE CODE | CLS | LAND USE DESCRIPTION | CAP | RD | LOC ZONE | FRONT | DEPTH | TOT LND UTS | UNIT TYPE | DT | DPTH FACT | % COND | TOT ADJ | UNIT PRICE | ADJ UNIT PRICE | LAND VALUE | OTHER ADJUSTMENTS AND NOTES | YEAR | DENSITY | DECL | FRZ | YR | CONSRV |
|---|---|---|---|---|---|---|---|---|---|---|---|---|---|---|---|---|---|---|---|---|---|---|---|---|
| 1 | 005000 | C | AGRICULTURAL | 100 | 0006 | OR | 0.00 | 0.00 | 1.00 | AC | | 1.00 | 1.00 | 1.00 | 45,000.00 | 45,000.00 | 45,000 | | | | | | | |
| 2 | 005010 | A | SERVICE ACRE | 0 | 0006 | OR | 0.00 | 0.00 | 2.00 | AC | | 1.00 | 1.00 | 1.00 | 500.00 | 500.00 | 1,000 | | | | | | | |
| 3 | 005600 | A | TIMBER 3 N S | 0 | | OR | 0.00 | 0.00 | 21.38 | AC | | 1.00 | 1.00 | 1.00 | 390.00 | 390.00 | 8,338 | | | | | | | |
| 4 | 005500 | A | TIMBER 2 N S | 0 | | OR | 0.00 | 0.00 | 32.86 | AC | | 1.00 | 1.00 | 1.00 | 525.00 | 525.00 | 17,252 | | | | | | | |
| 5 | 009530 | C | POND | 100 | | OR | 0.00 | 0.00 | 0.40 | AC | | 1.00 | 1.00 | 1.00 | 2,500.00 | 2,500.00 | 1,000 | | | | | | | |
| 6 | 009910 | M | MARKET VALUE | 0 | | OR | 0.00 | 0.00 | 56.24 | AC | | 1.00 | 1.00 | 1.00 | 5,500.00 | 5,500.00 | 309,320 | | | | | | | |

REVIEW DATE 02/14/2024 BY KBA Total Acres: 57.64 Total Land Value: 72,590 Market: 309,320 Agricultural: 26,590 Common: 46,000 PRINTED 07/30/2025 BY SYS