LOT 104
HAMPTON LAKES PHASE IV-A
OR 2343/796

HOLENCHICK ROBERT L JR & TINA CARTER
85577 FALL RIVER PKWY
FERNANDINA BEACH, FL 32034

2025

13-2N-27-0723-0104-0000

NASSAU COUNTY PROPERTY

BUILDING CHARACTERISTICS

ELEMENT	CD	CONSTRUCTION
Exterior Wall	31	HARDIE BRD 100
Roof Structur	08	IRREGULAR 100
Roof Cover	03	COMP SHNGL 100
Interior Wall	05	DRYWALL 100
Interior Floo	11	CLAY TILE 60
Interior Floo	14	CARPET 40
Air Condition	03	CENTRAL 100
Heating Type	04	AIR DUCTED 100
Bedrooms		3 100
Bathrooms		2.5 100
Frame	02	WOOD FRAME 100
Stories	1.	1. 100
Units		0 100
Occupancy	00	NONE 100
Quality	03	Quality Level 03
DOR CODE	0100	SINGLE FAMILY
MAP NUM		MKT AREA 04
NEIGHBORHOOD/LOC	4077.00	

AREA TYPE	TOTAL GROSS AREA	PCT OF BASE	YEAR	TOT ADJ AREA	SUBAREA MARKET VALUE
BAS	2,568	100	2021	2,568	346,722
FOP	35	30	2021	10	1,350
FOP	242	30	2021	73	9,856
SFB	1,339	80	2021	1,071	144,602
TOTALS	4,184			3,722	502,530

MARKET ADJUSTMENTS

TYPE	MDL	EFF. AREA	TOT ADJ PTS	EFF. BASE RATE	REPL. COST NEW	AYB	EYB	ECON	FNCT		NORM	% COND
0900	01	3,722	103.3200	136.38	507,606	2021	2021	0	0	0	1.00	99.00

1 SNGL FAM – 100% - 2025 Heated Area: 3639 HX Base Yr

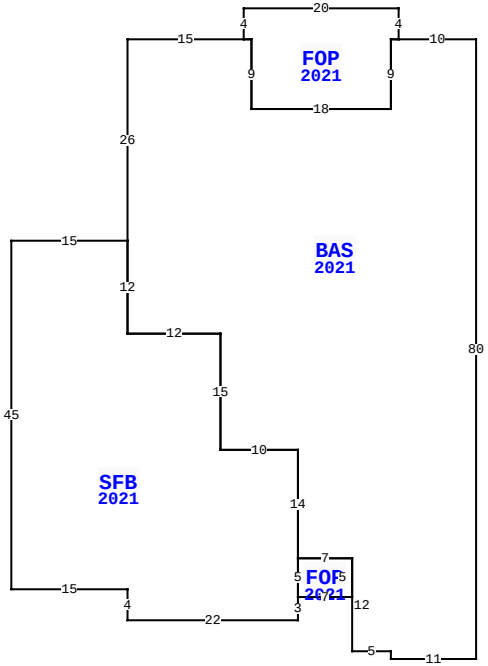

BLD DATE		LGL DATE	
XF DATE		LAND DATE	06/13/2023 MLU
INC DATE		AG DATE	

85577 FALL RIVER PKWY, FERNANDINA BEACH

VALUATION SUMMARY

VALUATION BY		STANDARD
Tax Group: 4	Tax Dist:	
BUILDING MARKET VALUE		502,530
TOTAL MARKET OB/XF VALUE		66,522
TOTAL LAND VALUE - MARKET		75,000
TOTAL MARKET VALUE		644,052
SOH/AGL Deduction		0
ASSESSED VALUE		644,052
TOTAL EXEMPTION VALUE	13	644,052
BASE TAXABLE VALUE		0
TOTAL JUST VALUE		644,052
NCON VALUE		57,559
INCOME VALUE		
PREVIOUS YEAR MKT VALUE		562,099

PERMIT NUM	DESCRIPTION	AMT	ISSUED
SP240006527	IN GROUND SWIMMIN	107,132	05/31/2024
21012310	CO ISSUED	0	09/15/2021
21000945	NEW CONSTR	391,061	03/03/2021

SALES DATA

OFF RECORD Number	DATE	TYPE INST	Q / U	V / I	RSN CD	SALE PRICE
2498/0668	9/16/2021	SW	Q	I	01	467,700
GRANTOR: RICHMOND AMERICAN HOM						
GRANTEE: HOLENCHICK ROBERT L						
2373/0856	7/02/2020	SW	Q	V	05	3,194,300
GRANTOR: AW VENTURE II LLC						
GRANTEE: RICHMOND AMERICAN H						

BUILDING NOTES

EXTRA FEATURES

LN	OB/XF CODE	DESCRIPTION	BLD	CAP	L	W	UNITS	UT	Adj R	ADJ UNIT PRICE	ORIG COND	YEAR ON	YEAR ACTUAL	Q	% COND	OB/XF MKT VALUE	NOTES
1	0812	CONCRETE C	0	100	0	0	1,445.00	SF	4.00	4.00	100	2021	2021	3	99	5,722	
2	0462	ST/AL FNC	0	100	185	4	740.00	SF	10.00	10.00	100	2025	2024		100	7,400	
3	0463	FENCE GATE	0	100	0	0	2.00	UT	300.00	300.00	100	2025	2024		100	600	
4	0912	SCRN RM G	0	100	0	0	840.00	SF	20.00	20.00	100	2025	2024		100	16,800	
5	0861	POOL GUNIT	0	100	0	0	368.00	SF	85.00	85.00	100	2025	2024		100	31,280	
6	0855	CONC PAVER	0	100	0	0	472.00	SF	10.00	10.00	100	2025	2024		100	4,720	

BUILDING DIMENSIONS

BAS=[YR=2021;ORIG=0,0] W10 W1 S9 W18 N9 W1 W15 S26 S12 E12 S15 E10 S14 E7 S12 E5 S1 E11 N80 $
SFB=[YR=2021;ORIG=-45,26] W15 S45 E15 S4 E22 N3 N5 N14 W10 N15 W12 N12 $
FOP=[YR=2021;ORIG=-10,0] N4 W20 S4 E1 S9 E18 N9 E1 $
FOP=[YR=2021;ORIG=-23,72] E7 N5 W7 S5 $
.

LAND DESCRIPTION

TOTAL OB/XF 66,522

LN	USE CODE	CLS	LAND USE DESCRIPTION	CAP	RD	LOC ZONE	FRONT	DEPTH	TOT LND UTS	UNIT TYPE	DT	DPTH FACT	% COND	TOT ADJ	UNIT PRICE	ADJ UNIT PRICE	LAND VALUE	OTHER ADJUSTMENTS AND NOTES	YEAR	DENSITY	DECL	FRZ	YR	CONSRV
1	000100	C	RES	100		PUD	0.00	0.00	1.00	LT		1.00	1.00	1.00	75,000.00	75,000.00	75,000							

REVIEW DATE 01/15/2025 BY KWX Total Acres: 0.00 Total Land Value: 75,000 Market: 0 Agricultural: 0 Common: 75,000 PRINTED 07/30/2025 BY SYS