LOT 75
HAMPTON LAKES PHASE IV-B
OR 2320/460

APPLING RICHARD JR & BEATRICE MITSUE
85353 FALL RIVER PKWY
FERNANDINA BEACH, FL 32034

2025

13-2N-27-0723-0075-0000

BUILDING CHARACTERISTICS

ELEMENT	CD	CONSTRUCTION
Exterior Wall	31	HARDIE BRD 100
Roof Structur	08	IRREGULAR 100
Roof Cover	03	COMP SHNGL 100
Interior Wall	05	DRYWALL 100
Interior Floo	13	LVT/LAMNT 70
Interior Floo	14	CARPET 30
Air Condition	03	CENTRAL 100
Heating Type	04	AIR DUCTED 100
Bedrooms		3 100
Bathrooms		2.5 100
Frame	02	WOOD FRAME 100
Stories	1.	1. 100
Units		0 100
Occupancy	00	NONE 100
Quality	03	Quality Level 03

DOR CODE 0100 SINGLE FAMILY
MAP NUM | MKT AREA 04
NEIGHBORHOOD/LOC 4077.00

AREA TYPE	TOTAL GROSS AREA	PCT OF BASE	YEAR	TOT ADJ AREA	SUBAREA MARKET VALUE
BAS	2,568	100	2021	2,568	333,451
FGR	1,339	55	2021	736	95,569
FOP	35	30	2021	10	1,299
FOP	242	30	2021	73	9,479
UOP	1,008	20	2022	202	26,229
TOTALS	5,192			3,589	466,026

MARKET ADJUSTMENTS

TYPE	MDL	EFF. AREA	TOT ADJ PTS	EFF. BASE RATE	REPL. COST NEW	AYB	EYB	ECON	FNCT		NORM	% COND
0900	01	3,589	99.3600	131.16	470,733	2021	2021	0	0	0	1.00	99.00

1 SNGL FAM – 100% - 2023 Heated Area: 2568 HX Base Yr 2023

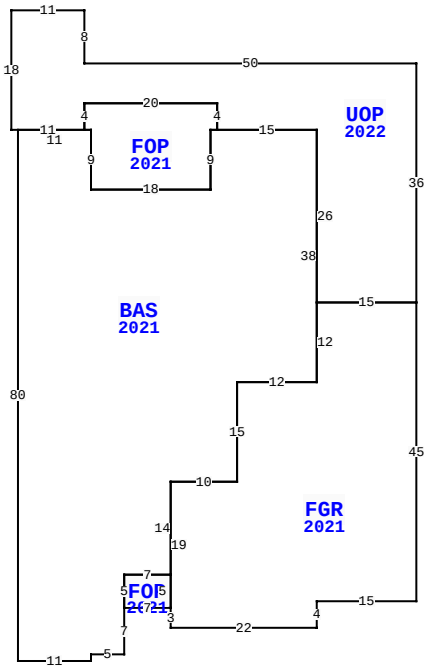

BLD DATE		LGL DATE	
XF DATE		LAND DATE	06/13/2023 MLU
INC DATE		AG DATE	

85353 FALL RIVER PKWY, FERNANDINA BEACH

NASSAU COUNTY PROPERTY

PAGE 1 of 1 4

VALUATION SUMMARY

VALUATION BY		STANDARD
Tax Group: 4	Tax Dist:	
BUILDING MARKET VALUE		466,026
TOTAL MARKET OB/XF VALUE		20,092
TOTAL LAND VALUE - MARKET		75,000
TOTAL MARKET VALUE		561,118
SOH/AGL Deduction		10,389
ASSESSED VALUE		550,729
TOTAL EXEMPTION VALUE	HX HB VX	55,722
BASE TAXABLE VALUE		495,007
TOTAL JUST VALUE		561,118
NCON VALUE		0
INCOME VALUE		
PREVIOUS YEAR MKT VALUE		539,184

PERMIT NUM	DESCRIPTION	AMT	ISSUED
22013220	ADDITION	20,000	08/29/2022
21001023	CO ISSUED	0	01/29/2021
20008137	NEW CONSTR	387,190	09/04/2020

SALES DATA

OFF RECORD Number	DATE	TYPE INST	Q U	V I	RSN CD	SALE PRICE
2564/1330	5/20/2022	WD	Q	I	02	605,000
GRANTOR: BASWELL ABEGAIL & PHI						
GRANTEE: APPLING RICHARD L J						
2431/0345	1/29/2021	SW	Q	I	01	393,000
GRANTOR: RICHMOND AMERICAN HOM						
GRANTEE: BASWELL ABEGAIL & P						

BUILDING NOTES

BUILDING DIMENSIONS

BAS=[YR=2021] W15 FOP=[YR=2021] N4 W20 S4 E1 S9 E18 N9 E1$ W1 S9 W18 N9 W11 S80 E11 N1 E5 N7 FOP=[YR=2021] E7 FGR=[YR=2021] S3 E22 N4 E15 N45 UOP=[YR=2022] N36 W50 N8 W11 S18 E11 N4 E20 S4 E15 S26 E15$ W15 S12 W12 S15 W10 S19$ N5 W7S5$ N5 E7 N14 E10 N15 E12 N38$.

EXTRA FEATURES

LN	OB/XF CODE	DESCRIPTION	BLD	CAP	L	W	UNITS	UT	Adj R	ADJ UNIT PRICE	ORIG COND	YEAR ON	YEAR ACTUAL	Q	% COND	OB/XF MKT VALUE	NOTES
1	0811	CONCRETE B	0	100	0	0	1,342.00	SF	5.20	5.20	100	2021	2021	3	99	6,909	
2	0911	SCRN RM A	0	100	0	0	810.00	SF	17.50	17.50	100	2022	2022	3	93	13,183	

LAND DESCRIPTION

TOTAL OB/XF 20,092

LN	USE CODE	CLS	LAND USE DESCRIPTION	CAP	RD	LOC ZONE	FRONT	DEPTH	TOT LND UTS	UNIT TYPE	DT	DPTH FACT	% COND	TOT ADJ	UNIT PRICE	ADJ UNIT PRICE	LAND VALUE	OTHER ADJUSTMENTS AND NOTES	YEAR	DENSITY	DECL	FRZ	YR	CONSRV
1	000100	C	RES	100		PUD	0.00	0.00	1.00	LT		1.00	1.00	1.00	75,000.00	75,000.00	75,000							

REVIEW DATE 01/10/2023 BY NW Total Acres: 0.00 Total Land Value: 75,000 Market: 0 Agricultural: 0 Common: 75,000 PRINTED 07/30/2025 BY SYS