LOT 68
HAMPTON LAKES PHASE IV-A
OR 2343/796

ROODT IAN & SHANNON REBECCA
85426 CANYON COURT
FERNANDINA BEACH, FL 32034

2025

13-2N-27-0723-0068-0000

NASSAU COUNTY PROPERTY

BUILDING CHARACTERISTICS

ELEMENT	CD	CONSTRUCTION
Exterior Wall	31	HARDIE BRD 100
Roof Structur	08	IRREGULAR 100
Roof Cover	03	COMP SHNGL 100
Interior Wall	05	DRYWALL 100
Interior Floo	13	LVT/LAMNT 100
Air Condition	03	CENTRAL 100
Heating Type	04	AIR DUCTED 100
Bedrooms		3 100
Bathrooms		3 100
Frame	02	WOOD FRAME 100
Stories	1.	1. 100
Units		0 100
Occupancy	00	NONE 100
Quality	03	Quality Level 03
DOR CODE	0100	SINGLE FAMILY
MAP NUM		MKT AREA 04
NEIGHBORHOOD/LOC	4077.00	

AREA TYPE	TOTAL GROSS AREA	PCT OF BASE	YEAR	TOT ADJ AREA	SUBAREA MARKET VALUE
BAS	2,568	100	2022	2,568	350,645
FGR	1,339	55	2022	736	100,496
FOP	35	30	2022	10	1,365
FOP	242	30	2022	73	9,968
TOTALS	4,184			3,387	462,474

MARKET ADJUSTMENTS

TYPE	MDL	EFF. AREA	TOT ADJ PTS	EFF. BASE RATE	REPL. COST NEW	AYB	EYB	ECON	FNCT		NORM	% COND
0900	01	3,387	103.9600	137.23	464,798	2022	2022	0	0	0	0.50	99.50

1 SNGL FAM – 0% - 2023 Heated Area: 2568 HX Base Yr

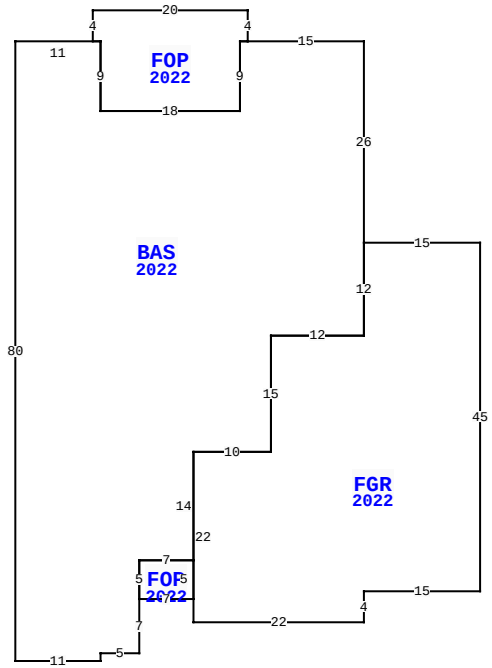

BLD DATE		LGL DATE	
XF DATE		LAND DATE	06/13/2023 MLU
INC DATE		AG DATE	

85426 APPLE CANYON CT, FERNANDINA BEACH

VALUATION SUMMARY

VALUATION BY	STANDARD
Tax Group: 4	Tax Dist:
BUILDING MARKET VALUE	462,474
TOTAL MARKET OB/XF VALUE	8,636
TOTAL LAND VALUE - MARKET	75,000
TOTAL MARKET VALUE	546,110
SOH/AGL Deduction	0
ASSESSED VALUE	546,110
TOTAL EXEMPTION VALUE	0
BASE TAXABLE VALUE	546,110
TOTAL JUST VALUE	546,110
NCON VALUE	0
INCOME VALUE	
PREVIOUS YEAR MKT VALUE	523,864

PERMIT NUM	DESCRIPTION	AMT	ISSUED
22007084	CO ISSUED	0	05/06/2022
21006919	NEW CONSTR	412,534	07/01/2021

SALES DATA

OFF RECORD Number	DATE	TYPE INST	Q / U	V / I	RSN CD	SALE PRICE
2565/0323	5/24/2022	SW	Q	I	01	538,600
GRANTOR: RICHMOND AMERICAN HOM						
GRANTEE: ROODT IAN & SHANNON						
2464/0053	5/21/2021	SW	Q	V	05	5,279,000
GRANTOR: AW VENTURE II LLC						
GRANTEE: RICHMOND AMERICAN H						

BUILDING NOTES

BUILDING DIMENSIONS

FGR=[YR=2022] W15 BAS=[YR=2022] N26 W15 FOP=[YR=2022] N4 W20 S4 E1 S9 E18 N9 E1$ W1 S9 W18 N9 W11 S80 E11 N1 E5 N7 FOP=[YR=2022] E7 N5 W7 S5$ N5 E7 N14 E10 N15 E12 N12$ S12 W12 S15 W10 S22 E22 N4 E15 N45 $.

EXTRA FEATURES

LN	OB/XF CODE	DESCRIPTION	BLD	CAP	L	W	UNITS	UT	Adj R	ADJ UNIT PRICE	ORIG COND	YEAR ON	YEAR ACTUAL	Q	% COND	OB/XF MKT VALUE	NOTES
1	0810	CONCRETE A	0	0	0	0	1,342.00	SF	6.50	6.50	100	2022	2022	3	99	8,636	

LAND DESCRIPTION

TOTAL OB/XF 8,636

LN	USE CODE	CLS	LAND USE DESCRIPTION	CAP	RD	LOC ZONE	FRONT	DEPTH	TOT LND UTS	UNIT TYPE	DT	DPTH FACT	% COND	TOT ADJ	UNIT PRICE	ADJ UNIT PRICE	LAND VALUE	OTHER ADJUSTMENTS AND NOTES	YEAR	DENSITY	DECL	FRZ	YR	CONSRV
1	000100	C	RES	0		PUD	0.00	0.00	1.00	LT		1.00	1.00	1.00	75,000.00	75,000.00	75,000							

REVIEW DATE 06/28/2022 BY NW Total Acres: 0.00 Total Land Value: 75,000 Market: 0 Agricultural: 0 Common: 75,000 PRINTED 07/30/2025 BY SYS