LOT 56
HAMPTON LAKES PHASE IV-A
OR 2343/796

LYONS AKI T
85262 NORTHFIELD COURT
FERNANDINA BEACH, FL 32034

2025

13-2N-27-0723-0056-0000

NASSAU COUNTY PROPERTY

BUILDING CHARACTERISTICS

ELEMENT	CD	CONSTRUCTION
Exterior Wall	31	HARDIE BRD 100
Roof Structur	08	IRREGULAR 100
Roof Cover	03	COMP SHNGL 100
Interior Wall	05	DRYWALL 100
Interior Floo	11	CLAY TILE 80
Interior Floo	14	CARPET 20
Air Condition	03	CENTRAL 100
Heating Type	04	AIR DUCTED 100
Bedrooms		3 100
Bathrooms		2 100
Frame	02	WOOD FRAME 100
Stories	1.	1. 100
Units		0 100
Occupancy	00	NONE 100
Quality	03	Quality Level 03

DOR CODE 0100 SINGLE FAMILY
MAP NUM | MKT AREA 04
NEIGHBORHOOD/LOC 4077.00

AREA TYPE	TOTAL GROSS AREA	PCT OF BASE	YEAR	TOT ADJ AREA	SUBAREA MARKET VALUE
BAS	2,241	100	2022	2,241	337,368
FGR	826	55	2022	454	68,347
FOP	37	30	2022	11	1,656
FSP	240	40	2025	96	14,452
PTO	416	5	2025	21	3,161
TOTALS	3,760			2,823	424,984

MARKET ADJUSTMENTS

TYPE	MDL	EFF. AREA	TOT ADJ PTS	EFF. BASE RATE	REPL. COST NEW	AYB	EYB	ECON	FNCT		NORM	% COND
0900	01	2,823	114.6240	151.30	427,120	2022	2022	0	0	0	0.50	99.50

1 SNGL FAM – 100% - 2023 Heated Area: 2241 HX Base Yr

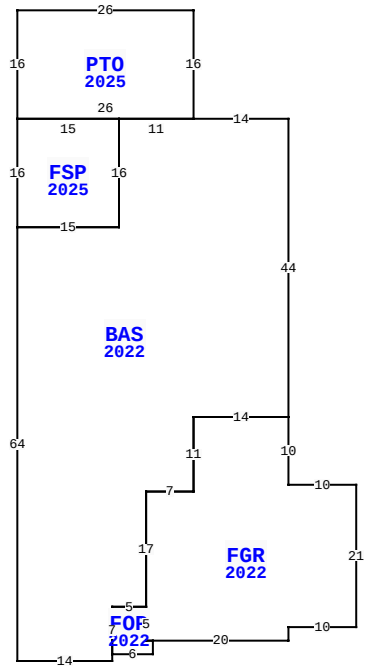

85262 NORTHFIELD CT, FERNANDINA BEACH

BLD DATE		LGL DATE	
XF DATE		LAND DATE	06/13/2023 MLU
INC DATE		AG DATE	

VALUATION SUMMARY

VALUATION BY		STANDARD
Tax Group: 4	Tax Dist:	
BUILDING MARKET VALUE		424,984
TOTAL MARKET OB/XF VALUE		18,774
TOTAL LAND VALUE - MARKET		75,000
TOTAL MARKET VALUE		518,758
SOH/AGL Deduction		15,713
ASSESSED VALUE		503,045
TOTAL EXEMPTION VALUE	13	503,045
BASE TAXABLE VALUE		0
TOTAL JUST VALUE		518,758
NCON VALUE		10,469
INCOME VALUE		
PREVIOUS YEAR MKT VALUE		484,642

PERMIT NUM	DESCRIPTION	AMT	ISSUED
B240004230	ADD 26X15 SCREEN	16,000	04/12/2024
22008300	CO ISSUED	0	05/27/2022
21006661	NEW CONSTR	339,889	07/01/2021

SALES DATA

OFF RECORD Number	DATE	TYPE INST	Q U	V I	RSN CD	SALE PRICE
2572/0568	5/27/2022	SW	Q	I	01	516,400
GRANTOR: RICHMOND AMERICAN HOM						
GRANTEE: LYONS WILLIAM DAVID						
2464/0053	5/21/2021	SW	Q	V	05	5,279,000
GRANTOR: AW VENTURE II LLC						
GRANTEE: RICHMOND AMERICAN H						

BUILDING NOTES

EXTRA FEATURES

LN	OB/XF CODE	DESCRIPTION	BLD	CAP	L	W	UNITS	UT	Adj R	ADJ UNIT PRICE	ORIG COND	YEAR ON	YEAR ACTUAL	Q	% COND	OB/XF MKT VALUE	NOTES
1	0855	CONC PAVER	0	100	0	0	1,161.00	SF	10.00	10.00	100	2022	2022	3	99	11,494	
2	0911	SCRN RM A	0	100	26	16	416.00	SF	17.50	17.50	100	2025	2024		100	7,280	

BUILDING DIMENSIONS

BAS=[YR=2022;ORIG=0,0] W14 W11 S16 W15 S64 E14 N1 N7 E5 N17 E7 N11 E14 N44 $
FGR=[YR=2022;ORIG=-20,77] E20 N2 E10 N21 W10 N10 W14 S11 W7 S17 S5 E1 $
PTO=[YR=2025;ORIG=-40,0] E26 N16 W26 S16 $
FSP=[YR=2025;ORIG=-25,0] W15 S16 E15 N16 $
FOP=[YR=2022;ORIG=-26,79] E6 N2 W1 N5 W5 S7 $
.

LAND DESCRIPTION

TOTAL OB/XF 18,774

LN	USE CODE	CLS	LAND USE DESCRIPTION	CAP	RD	LOC ZONE	FRONT	DEPTH	TOT LND UTS	UNIT TYPE	DT	DPTH FACT	% COND	TOT ADJ	UNIT PRICE	ADJ UNIT PRICE	LAND VALUE	OTHER ADJUSTMENTS AND NOTES	YEAR	DENSITY	DECL	FRZ	YR	CONSRV
1	000100	C	RES	100		PUD	0.00	0.00	1.00	LT		1.00	1.00	1.00	75,000.00	75,000.00	75,000							

REVIEW DATE 06/27/2024 BY KW Total Acres: 0.00 Total Land Value: 75,000 Market: 0 Agricultural: 0 Common: 75,000 PRINTED 07/30/2025 BY SYS