LOT 52
HAMPTON LAKES PHASE IV-A
OR 2343/796

LYON MARY & STANLEY M
85230 NORTHFIELD COURT
FERNANDINA BEACH, FL 32034

2025

13-2N-27-0723-0052-0000

NASSAU COUNTY PROPERTY

BUILDING CHARACTERISTICS

ELEMENT	CD	CONSTRUCTION
Exterior Wall	31	HARDIE BRD 100
Roof Structur	08	IRREGULAR 100
Roof Cover	03	COMP SHNGL 100
Interior Wall	05	DRYWALL 100
Interior Floo	12	HARDWOOD 70
Interior Floo	14	CARPET 30
Air Condition	03	CENTRAL 100
Heating Type	04	AIR DUCTED 100
Bedrooms		3 100
Bathrooms		2.5 100
Frame	02	WOOD FRAME 100
Stories	1.	1. 100
Units		0 100
Occupancy	00	NONE 100
Quality	03	Quality Level 03
DOR CODE	0100	SINGLE FAMILY
MAP NUM		MKT AREA 04
NEIGHBORHOOD/LOC	4077.00	

AREA TYPE	TOTAL GROSS AREA	PCT OF BASE	YEAR	TOT ADJ AREA	SUBAREA MARKET VALUE
BAS	2,568	100	2022	2,568	349,086
FGR	1,339	55	2022	736	100,049
FOP	35	30	2022	10	1,359
FOP	242	30	2022	73	9,923
TOTALS	4,184			3,387	460,418

MARKET ADJUSTMENTS

TYPE	MDL	EFF. AREA	TOT ADJ PTS	EFF. BASE RATE	REPL. COST NEW	AYB	EYB	ECON	FNCT		NORM	% COND
0900	01	3,387	103.5000	136.62	462,732	2022	2022	0	0	0	0.50	99.50

1 SNGL FAM – 100% - 2023 Heated Area: 2568 HX Base Yr 2023

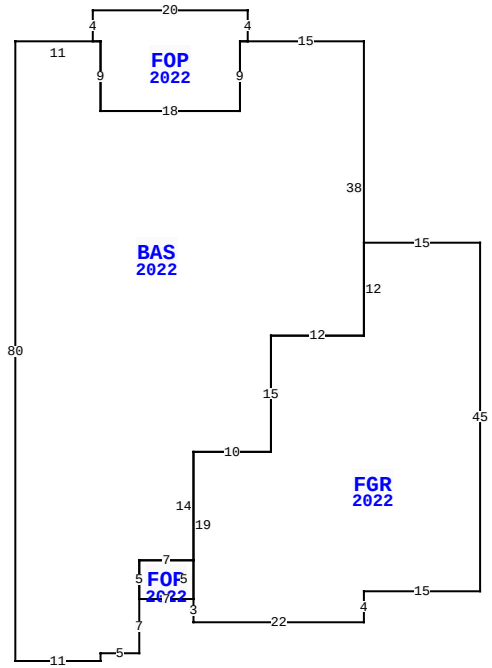

85230 NORTHFIELD CT, FERNANDINA BEACH

BLD DATE		LGL DATE	
XF DATE		LAND DATE	06/13/2023 MLU
INC DATE		AG DATE	

VALUATION SUMMARY

VALUATION BY		STANDARD
Tax Group: 4	Tax Dist:	
BUILDING MARKET VALUE		460,418
TOTAL MARKET OB/XF VALUE		15,674
TOTAL LAND VALUE - MARKET		75,000
TOTAL MARKET VALUE		551,092
SOH/AGL Deduction		36,663
ASSESSED VALUE		514,429
TOTAL EXEMPTION VALUE	HX HB	50,722
BASE TAXABLE VALUE		463,707
TOTAL JUST VALUE		551,092
NCON VALUE		0
INCOME VALUE		
PREVIOUS YEAR MKT VALUE		529,218

PERMIT NUM	DESCRIPTION	AMT	ISSUED
22014597	CO ISSUED	0	09/26/2022
21004867	NEW CONSTR	395,227	05/06/2021

SALES DATA

OFF RECORD Number	DATE	TYPE INST	Q U	V I	RSN CD	SALE PRICE
2594/0048	9/27/2022	SW	Q	I	01	608,900
GRANTOR: RICHMOND AMERICAN HOM						
GRANTEE: LYON MARY & STANLEY						
2464/0053	5/21/2021	SW	Q	V	05	5,279,000
GRANTOR: AW VENTURE II LLC						
GRANTEE: RICHMOND AMERICAN H						

BUILDING NOTES

BUILDING DIMENSIONS

BAS=[YR=2022] W15 FOP=[YR=2022] N4 W20 S4 E1 S9 E18 N9 E1$ W1 S9 W18 N9 W11 S80 E11 N1 E5 N7 FOP=[YR=2022] E7 FGR=[YR=2022] S3 E22 N4 E15 N45 W15 S12 W12 S15 W10 S19$ N5 W7 S5$ N5 E7 N14 E10 N15 E12 N38$.

EXTRA FEATURES

LN	OB/XF CODE	DESCRIPTION	BLD	CAP	L	W	UNITS	UT	Adj R	ADJ UNIT PRICE	ORIG COND	YEAR ON	YEAR ACTUAL	Q	% COND	OB/XF MKT VALUE	NOTES
1	0811	CONCRETE B	0	100	0	0	1,336.00	SF	5.20	5.20	100	2022	2022	3	99	6,878	
2	0462	ST/AL FNC	0	100	0	0	864.00	SF	10.00	10.00	100	2022	2022	3	95	8,208	
3	0463	FENCE GATE	0	100	0	0	2.00	UT	300.00	300.00	100	2022	2022	3	98	588	

LAND DESCRIPTION

TOTAL OB/XF 15,674

LN	USE CODE	CLS	LAND USE DESCRIPTION	CAP	RD	LOC ZONE	FRONT	DEPTH	TOT LND UTS	UNIT TYPE	DT	DPTH FACT	% COND	TOT ADJ	UNIT PRICE	ADJ UNIT PRICE	LAND VALUE	OTHER ADJUSTMENTS AND NOTES	YEAR	DENSITY	DECL	FRZ	YR	CONSRV
1	000100	C	RES	100		PUD	0.00	0.00	1.00	LT		1.00	1.00	1.00	75,000.00	75,000.00	75,000							

REVIEW DATE 02/08/2023 BY NW Total Acres: 0.00 Total Land Value: 75,000 Market: 0 Agricultural: 0 Common: 75,000 PRINTED 07/30/2025 BY SYS