LOT 123
IN OR 2105/328
HAMPTON LAKES #1 PB 7/252

LEOPOLD GARY R & EVELYN M
85034 CHERRY CREEK DR
FERNANDINA BEACH, FL 32034

2025

13-2N-27-0720-0123-0000

BUILDING CHARACTERISTICS

ELEMENT	CD	CONSTRUCTION
Exterior Wall	16	WD FR STUC 100
Roof Structur	08	IRREGULAR 100
Roof Cover	03	COMP SHNGL 100
Interior Wall	05	DRYWALL 100
Interior Floo	11	CLAY TILE 60
Interior Floo	14	CARPET 40
Air Condition	03	CENTRAL 100
Heating Type	04	AIR DUCTED 100
Bedrooms		6 100
Bathrooms		4 100
Frame	02	WOOD FRAME 100
Stories	2.	2. 100
Units		0 100
Occupancy	00	NONE 100
Quality	03	Quality Level 03
DOR CODE	0100	SINGLE FAMILY
MAP NUM		MKT AREA 04
NEIGHBORHOOD/LOC	4077.00	

AREA TYPE	TOTAL GROSS AREA	PCT OF BASE	YEAR	TOT ADJ AREA	SUBAREA MARKET VALUE
BAS	3,209	100	2017	3,209	410,589
FGR	712	55	2017	392	50,156
FOP	249	30	2017	75	9,596
FOP	320	30	2017	96	12,283
FUS	893	100	2017	893	114,259
STR	56	10	2017	6	768
TOTALS	5,439			4,671	597,652

MARKET ADJUSTMENTS

TYPE	MDL	EFF. AREA	TOT ADJ PTS	EFF. BASE RATE	REPL. COST NEW	AYB	EYB	ECON	FNCT		NORM	% COND
0900	01	4,671	100.4480	132.59	619,328	2017	2017	0	0	0	3.50	96.50

1 SNGL FAM – 100% - 2018 Heated Area: 4102 HX Base Yr 2018

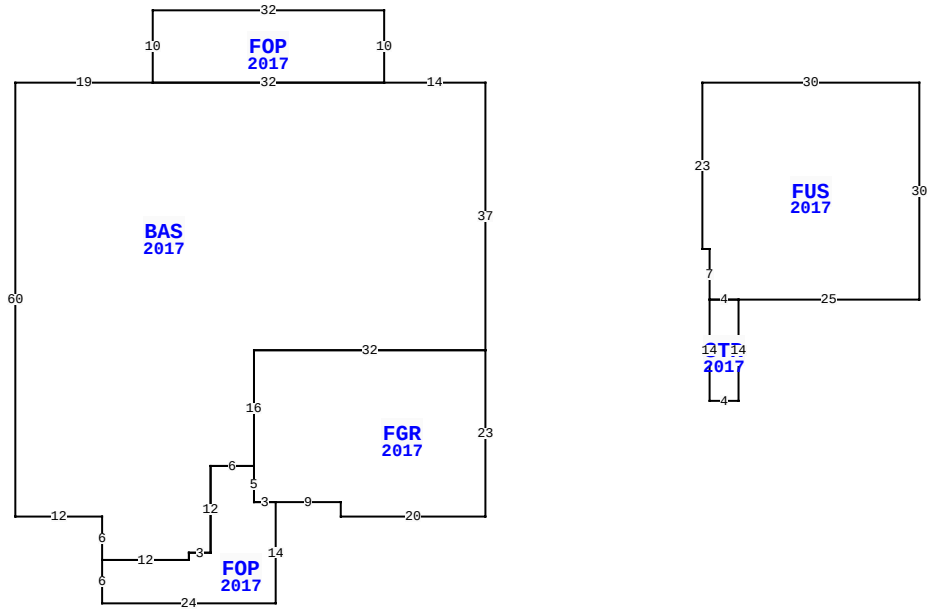

BLD DATE		LGL DATE	
XF DATE		LAND DATE	06/13/2023 MLU
INC DATE		AG DATE	

85034 CHERRY CREEK DR, FERNANDINA BEACH

NASSAU COUNTY PROPERTY

PAGE 1 of 1 4

VALUATION SUMMARY

VALUATION BY		STANDARD
Tax Group: 4	Tax Dist:	
BUILDING MARKET VALUE		597,652
TOTAL MARKET OB/XF VALUE		4,243
TOTAL LAND VALUE - MARKET		75,000
TOTAL MARKET VALUE		676,895
SOH/AGL Deduction		332,072
ASSESSED VALUE		344,823
TOTAL EXEMPTION VALUE	HX HB VX	55,722
BASE TAXABLE VALUE		289,101
TOTAL JUST VALUE		676,895
NCON VALUE		0
INCOME VALUE		
PREVIOUS YEAR MKT VALUE		648,183

PERMIT NUM	DESCRIPTION	AMT	ISSUED
B1632747	CO ISSUED	0	02/27/2017
B1632747	NEW CONSTR	508,335	07/01/2016

SALES DATA

OFF RECORD Number	DATE	TYPE INST	Q / U	V / I	RSN CD	SALE PRICE
2105/0328	2/28/2017	SW	Q	I	02	445,700
GRANTOR: AVATAR PROPERTIES INC						
GRANTEE: LEOPOLD GARY RICHAR						
1974/0280	4/13/2015	SW	U	V	37	3,829,500
GRANTOR: AW VENTURE I LLC						
GRANTEE: AVATAR PROPERTIES I						

BUILDING NOTES

BUILDING DIMENSIONS

BAS=[YR=2017;ORIG=0,0] W14 W32 W19 S60 E12 S6 E12 N1 E3 N12 E6 N16 E32 N37 $
FUS=[YR=2017;ORIG=30,0] E30 S30 W25 W4 N7 W1 N23 $
FGR=[YR=2017;ORIG=-29,58] E9 S2 E20 N23 W32 S16 S5 E3 $
FOP=[YR=2017;ORIG=-14,0] N10 W32 S10 E32 $
FOP=[YR=2017;ORIG=-53,66] S6 E24 N14 W3 N5 W6 S12 W3 S1 W12 $
STR=[YR=2017;ORIG=35,30] S14 W4 N14 E4 $
PTR=[YR=2017;ORIG=0,0] E30 W30 $
.

EXTRA FEATURES

LN	OB/XF CODE	DESCRIPTION	BLD	CAP	L	W	UNITS	UT	Adj R	ADJ UNIT PRICE	ORIG COND	YEAR ON	YEAR ACTUAL	Q	% COND	OB/XF MKT VALUE	NOTES
1	0812	CONCRETE C	0	100	0	0	1,105.00	SF	4.00	4.00	100	2017	2017	3	96	4,243	

LAND DESCRIPTION

TOTAL OB/XF 4,243

LN	USE CODE	CLS	LAND USE DESCRIPTION	CAP	RD	LOC ZONE	FRONT	DEPTH	TOT LND UTS	UNIT TYPE	DT	DPTH FACT	% COND	TOT ADJ	UNIT PRICE	ADJ UNIT PRICE	LAND VALUE	OTHER ADJUSTMENTS AND NOTES	YEAR	DENSITY	DECL	FRZ	YR	CONSRV
1	000135	C	RES NATURAL	100		PUD	0.00	0.00	1.00	LT		1.00	1.00	1.00	75,000.00	75,000.00	75,000							

REVIEW DATE 10/28/2024 BY KWA Total Acres: 0.00 Total Land Value: 75,000 Market: 0 Agricultural: 0 Common: 75,000 PRINTED 07/30/2025 BY SYS