LOT 70
HAMPTON LAKES #1 PB 7/252

CROCKER PAUL/SUDOL BRENDA
85108 CHAMPLAIN DR
FERNANDINA BEACH, FL 32034

2025

13-2N-27-0720-0070-0000

BUILDING CHARACTERISTICS

ELEMENT	CD	CONSTRUCTION
Exterior Wall	16	WD FR STUC 100
Roof Structur	08	IRREGULAR 100
Roof Cover	03	COMP SHNGL 100
Interior Wall	05	DRYWALL 100
Interior Floo	12	HARDWOOD 50
Interior Floo	14	CARPET 50
Air Condition	03	CENTRAL 100
Heating Type	04	AIR DUCTED 100
Bedrooms		3 100
Bathrooms		2.5 100
Frame	02	WOOD FRAME 100
Stories	2.	2. 100
Units		0 100
Occupancy	00	NONE 100
Quality	03	Quality Level 03

DOR CODE	0100	SINGLE FAMILY	
MAP NUM		MKT AREA	04
NEIGHBORHOOD/LOC	4077.00		

AREA TYPE	TOTAL GROSS AREA	PCT OF BASE	YEAR	TOT ADJ AREA	SUBAREA MARKET VALUE
BAS	1,780	100	2015	1,780	230,184
FGR	420	55	2015	231	29,872
FOP	136	30	2015	41	5,302
FOP	190	30	2015	57	7,371
FUS	900	100	2015	900	116,385
STR	80	10	2015	8	1,034
UAT	132	10	2015	13	1,681
TOTALS	3,638			3,030	391,829

MARKET ADJUSTMENTS

TYPE	MDL	EFF. AREA	TOT ADJ PTS	EFF. BASE RATE	REPL. COST NEW	AYB	EYB	ECON	FNCT		NORM	% COND
0900	01	3,030	102.5800	135.41	410,292	2015	2015	0	0	0	4.50	95.50

1 SNGL FAM – 100% - 2023 Heated Area: 2680 HX Base Yr 2023

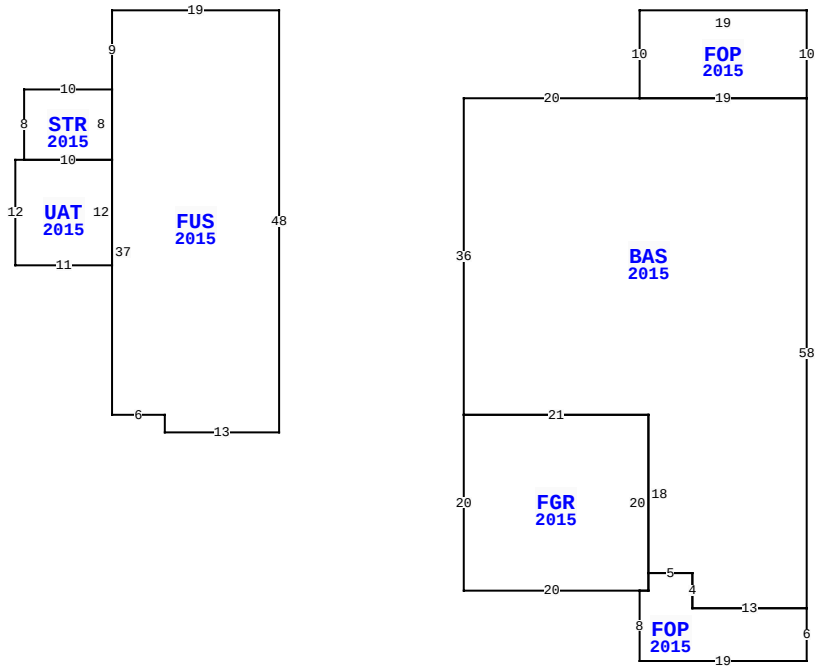

85108 CHAMPLAIN DR, FERNANDINA BEACH

BLD DATE		LGL DATE	
XF DATE		LAND DATE	06/13/2023 MLU
INC DATE		AG DATE	

NASSAU COUNTY PROPERTY

PAGE 1 of 1 4

VALUATION SUMMARY

VALUATION BY		STANDARD
Tax Group: 4	Tax Dist:	
BUILDING MARKET VALUE		391,829
TOTAL MARKET OB/XF VALUE		9,523
TOTAL LAND VALUE - MARKET		75,000
TOTAL MARKET VALUE		476,352
SOH/AGL Deduction		8,929
ASSESSED VALUE		467,423
TOTAL EXEMPTION VALUE	HX HB	50,722
BASE TAXABLE VALUE		416,701
TOTAL JUST VALUE		476,352
NCON VALUE		0
INCOME VALUE		
PREVIOUS YEAR MKT VALUE		457,663

PERMIT NUM	DESCRIPTION	AMT	ISSUED
B1530700	CO ISSUED	0	12/30/2015
B1530700	NEW CONSTR	324,682	06/01/2015

SALES DATA

OFF RECORD Number	DATE	TYPE INST	Q / U	V / I	RSN CD	SALE PRICE
2498/1904	9/22/2021	WD	Q	I	02	480,000
GRANTOR: COLLINS JOSHUA D & HA						
GRANTEE: CROCKER PAUL & BREN						
2193/0661	4/27/2018	WD	Q	I	01	335,000
GRANTOR: KOCHIS BRANDON & REBE						
GRANTEE: COLLINS JOSHUA DANI						

BUILDING NOTES

BUILDING DIMENSIONS

FOP=[YR=2015] W19 S10 BAS=[YR=2015] W20 S36 FGR=[YR=2015] S20 E20 FOP=[YR=2015] S8 E19 N6 W13 N4 W5 S2 W1$ E1 N20 W21$ E21 S18 E5 S4 E13 N58 W19$ E19 N10$ PTR=W60 FUS=[YR=2015] W19 S9 STR=[YR=2015] W10 S8 UAT=[YR=2015] W1 S12 E11 N12 W10$ E10 N8$ S37 E6 S2 E13 N48$ E60 $.

EXTRA FEATURES

LN	OB/XF CODE	DESCRIPTION	BLD	CAP	L	W	UNITS	UT	Adj R	ADJ UNIT PRICE	ORIG COND	YEAR ON	YEAR ACTUAL	Q	% COND	OB/XF MKT VALUE	NOTES
1	0811	CONCRETE B	0	100	0	0	820.00	SF	5.20	5.20	100	2015	2015	3	95	4,051	
2	0462	ST/AL FNC	0	100	0	0	576.00	SF	10.00	10.00	100	2022	2022	3	95	5,472	

LAND DESCRIPTION

TOTAL OB/XF 9,523

LN	USE CODE	CLS	LAND USE DESCRIPTION	CAP	RD	LOC ZONE	FRONT	DEPTH	TOT LND UTS	UNIT TYPE	DT	DPTH FACT	% COND	TOT ADJ	UNIT PRICE	ADJ UNIT PRICE	LAND VALUE	OTHER ADJUSTMENTS AND NOTES	YEAR	DENSITY	DECL	FRZ	YR	CONSRV
1	000134	C	RES POND	100		PUD	0.00	0.00	1.00	LT		1.00	1.00	1.00	75,000.00	75,000.00	75,000							

REVIEW DATE 01/06/2023 BY NWA Total Acres: 0.00 Total Land Value: 75,000 Market: 0 Agricultural: 0 Common: 75,000 PRINTED 07/30/2025 BY SYS