LOT 19 EXCEPT THE W'LY 215.32
IN OR 1329/1484
NASSAU LANDING PB 4/85

HOLLIS JOHN P & SUSANNE I
75007 EDWARDS ROAD
YULEE, FL 32097-2660

2025

13-2N-26-4200-0019-0010

NASSAU COUNTY PROPERTY

BUILDING CHARACTERISTICS

ELEMENT	CD	CONSTRUCTION
Exterior Wall	05	AVERAGE 100
Roof Structur	03	GABLE/HIP 100
Roof Cover	03	COMP SHNGL 100
Interior Wall	05	DRYWALL 100
Interior Floo	13	LVT/LAMNT 70
Interior Floo	14	CARPET 30
Air Condition	03	CENTRAL 100
Heating Type	04	AIR DUCTED 100
Bedrooms		3 100
Bathrooms		2 100
Frame	02	WOOD FRAME 100
Stories	2.	2. 100
Units		0 100
BUD8 Adjustme	04	DIST 01 100
Occupancy	00	NONE 100
Quality	03	Quality Level 03
DOR CODE	0100	SINGLE FAMILY
MAP NUM		MKT AREA 05
NEIGHBORHOOD/LOC	5001.00	

AREA TYPE	TOTAL GROSS AREA	PCT OF BASE	YEAR	TOT ADJ AREA	SUBAREA MARKET VALUE
BAS	1,352	100	1993	1,352	119,528
BAS	447	100	2005	447	39,519
DCK	52	10	2005	5	442
DCK	736	10	2005	74	6,542
FOP	188	30	2005	56	4,951
UGR	905	45	2002	407	35,982
UOP	158	20	2005	32	2,829
UOP	800	20	2005	160	14,145
UST	20	45	2002	9	796
UST	20	45	2002	9	796
TOTALS	4,708			2,565	226,768

MARKET ADJUSTMENTS

TYPE	MDL	EFF. AREA	TOT ADJ PTS	EFF. BASE RATE	REPL. COST NEW	AYB	EYB	ECON	FNCT		NORM	% COND
0100	01	2,565	103.1040	103.10	264,452	1984	1995	0	0	0	14.25	85.75

1 SINGLE FAM – 0% - 0 Heated Area: 1799 HX Base Yr

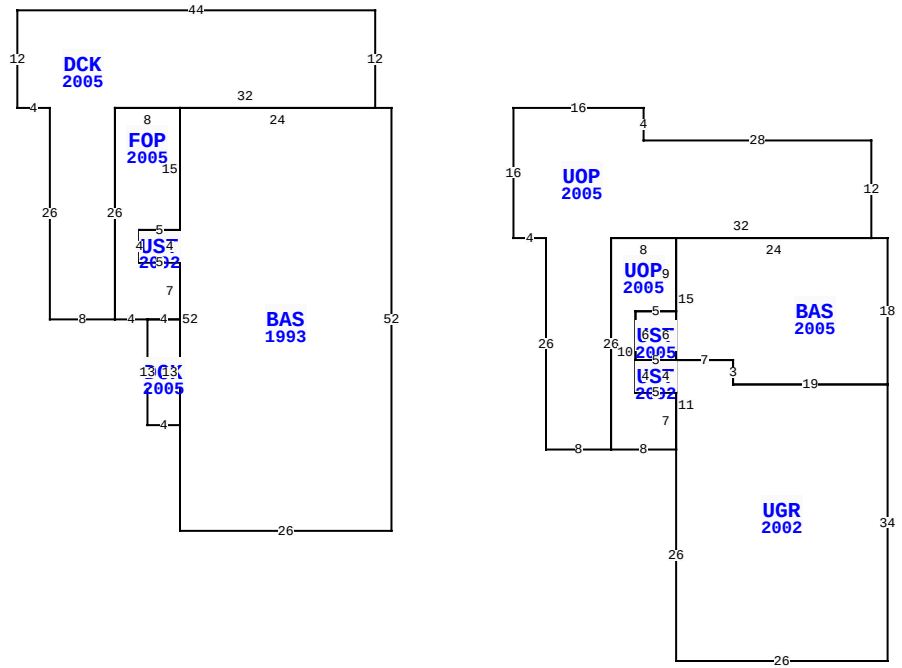

** This building has 11 Sub-Areas

75007 EDWARDS RD, YULEE

BLD DATE		LGL DATE	
XF DATE		LAND DATE	
INC DATE		AG DATE	

VALUATION SUMMARY

VALUATION BY	STANDARD
Tax Group: 4	Tax Dist:
BUILDING MARKET VALUE	226,768
TOTAL MARKET OB/XF VALUE	33,999
TOTAL LAND VALUE - MARKET	200,000
TOTAL MARKET VALUE	460,767
SOH/AGL Deduction	68,892
ASSESSED VALUE	391,875
TOTAL EXEMPTION VALUE	0
BASE TAXABLE VALUE	391,875
TOTAL JUST VALUE	460,767
NCON VALUE	0
INCOME VALUE	
PREVIOUS YEAR MKT VALUE	356,250

PERMIT NUM	DESCRIPTION	AMT	ISSUED

SALES DATA

OFF RECORD Number	DATE	TYPE INST	Q / U	V / I	RSN CD	SALE PRICE
1329/1484	6/30/2005	WD	Q	I		285,000
GRANTOR: SALMON LARRY R & DENN						
GRANTEE: HOLLIS JOHN P & SUS						
0416/0306	3/01/1984	WD	U	V		100
GRANTOR:						
GRANTEE:						

BUILDING NOTES

BUILDING DIMENSIONS

BAS=[YR=1993] W2 DCK=[YR=2005] N12 W44 S12 E4 S26 E8 N26
E32 $ W24 FOP=[YR=2005] W8 S26 E4DCK=[YR=2005] S13 E4 N13
W4 $ E4 N7 UST=[YR=2002] N4 W5 S4 E5 $ W5 N4 E5 N15 $ S52
E26 N52 $ PTR= E15 UOP=[YR=2005] E16 S4 E28 S12
BAS=[YR=2005] E2 S18 UGR=[YR=2002] S34 W26 N26
UOP=[YR=2005] W8 N26 E8 S9 UST=[YR=2005] W5 S6
UST=[YR=2002] S4 E5 N4 W5 $ E5 N6 $ W5 S10 E5 S7 $ N11 E7 S3
E19 $ W19 N3 W7 N15 E24 $ W32 S26 W8 N26 W4 N16 $ W15 $.

EXTRA FEATURES

LN	OB/XF CODE	DESCRIPTION	BLD	CAP	L	W	UNITS	UT	Adj R	ADJ UNIT PRICE	ORIG COND	YEAR ON	YEAR ACTUAL	Q	% COND	OB/XF MKT VALUE	NOTES
1	0803	ASPHALT C	0	0	0	0	4,342.00	SF	2.00	2.00	100	1996	1996	3	50	4,342	
2	0812	CONCRETE C	0	0	0	0	1,004.00	SF	4.00	4.00	100	1996	1996	3	70	2,811	
3	0410	ELEVATOR	0	0	0	0	1.00	UT	10,000.00	10,000.00	100	2003	2003	3	100	10,000	
4	0920	CWALL-WD/M	0	0	0	0	70.00	LF	390.00	390.00	100	2004	2004	3	21	5,733	
5	0968	STAIRS	0	0	0	0	48.00	SF	10.00	10.00	100	2005	2005	3	100	480	
6	0968	STAIRS	0	0	0	0	112.00	SF	10.00	10.00	100	2005	2005	3	100	1,120	
7	0300	BOAT DCK W	0	0	0	0	376.00	SF	40.00	40.00	100	2007	2007	3	44	6,618	
8	0802	ASPHALT B	0	0	0	0	2,080.00	SF	2.40	2.40	100	2007	2007	3	58	2,895	

LAND DESCRIPTION

TOTAL OB/XF 33,999

LN	USE CODE	CLS	LAND USE DESCRIPTION	CAP	RD	LOC ZONE	FRONT	DEPTH	TOT LND UTS	UNIT TYPE	DT	DPTH FACT	% COND	TOT ADJ	UNIT PRICE	ADJ UNIT PRICE	LAND VALUE	OTHER ADJUSTMENTS AND NOTES	YEAR	DENSITY	DECL	FRZ	YR	CONSRV
1	000131	C	RES CREEK	0	0006	RSF-1	0.00	0.00	1.00	LT		1.00	1.00	1.00	200,000.00	200,000.00	200,000							

REVIEW DATE 05/12/2019 BY KBA Total Acres: 0.00 Total Land Value: 200,000 Market: 0 Agricultural: 0 Common: 200,000 PRINTED 07/30/2025 BY SYS