LOT 15
MCARTHUR ESTATES PBK 8/140

JOHNSON PAUL & CAROL D
96510 MCARTHUR ESTATES DRIVE
FERNANDINA BEACH, FL 32034

2025

12-2N-28-1685-0015-0000

NASSAU COUNTY PROPERTY

BUILDING CHARACTERISTICS

ELEMENT	CD	CONSTRUCTION
Exterior Wall	10	ABOVE AVG 100
Roof Structur	08	IRREGULAR 100
Roof Cover	13	STAND SEAM 100
Interior Wall	05	DRYWALL 100
Interior Floo	12	HARDWOOD 80
Interior Floo	14	CARPET 20
Air Condition	03	CENTRAL 100
Heating Type	04	AIR DUCTED 100
Bedrooms		3 100
Bathrooms		3.5 100
Frame	02	WOOD FRAME 100
Stories	1.	1. 100
Units		0 100
Quality	03	Quality Level 03

DOR CODE 0100 SINGLE FAMILY
MAP NUM | MKT AREA 03
NEIGHBORHOOD/LOC 3049.00

AREA TYPE	TOTAL GROSS AREA	PCT OF BASE	YEAR	TOT ADJ AREA	SUBAREA MARKET VALUE
BAS	3,263	100	2020	3,263	713,938
FGR	550	55	2020	302	66,077
FOP	82	30	2020	25	5,470
FOP	276	30	2020	83	18,160
FST	15	55	2020	8	1,750
FST	308	55	2020	169	36,977
TOTALS	4,494			3,850	842,372

MARKET ADJUSTMENTS

TYPE	MDL	EFF. AREA	TOT ADJ PTS	EFF. BASE RATE	REPL. COST NEW	AYB	EYB	ECON	FNCT		NORM	% COND
0500	11	3,850	140.5890	222.13	855,200	2020	2020	0	0	0	1.50	98.50

1 SFR CUST – 100% - 2021 Heated Area: 3263 HX Base Yr 2021

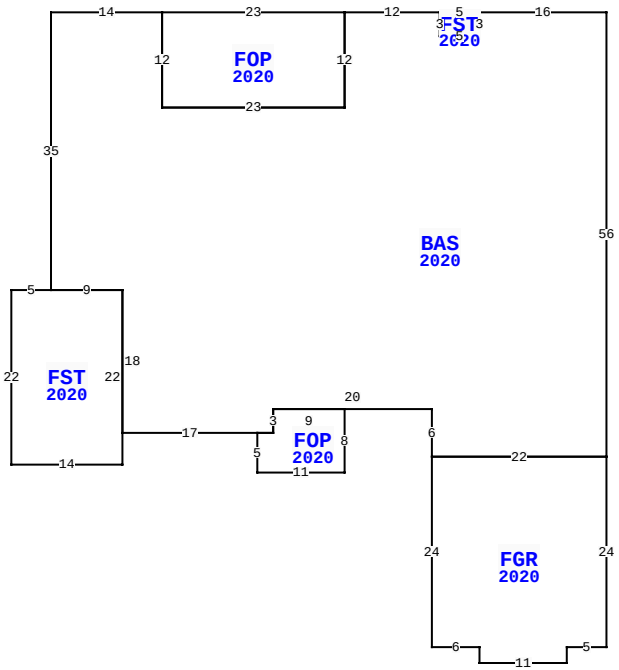

96510 MCARTHUR ESTATES DR, FERNANDINA BEACH

BLD DATE		LGL DATE	
XF DATE		LAND DATE	04/10/2025 MLU
INC DATE		AG DATE	

VALUATION SUMMARY

VALUATION BY		STANDARD
Tax Group: 8	Tax Dist:	
BUILDING MARKET VALUE		842,372
TOTAL MARKET OB/XF VALUE		75,762
TOTAL LAND VALUE - MARKET		350,000
TOTAL MARKET VALUE		1,268,134
SOH/AGL Deduction		360,103
ASSESSED VALUE		908,031
TOTAL EXEMPTION VALUE	HX HB	50,722
BASE TAXABLE VALUE		857,309
TOTAL JUST VALUE		1,268,134
NCON VALUE		0
INCOME VALUE		
PREVIOUS YEAR MKT VALUE		1,211,545

PERMIT NUM	DESCRIPTION	AMT	ISSUED
B1909562	SWIM POOL	58,000	09/10/2019
B1904230	NEW CONSTR	453,087	04/25/2019

SALES DATA

OFF RECORD Number	DATE	TYPE INST	Q U	V I	RSN CD	SALE PRICE
2264/1572	3/27/2019	SW	Q	V	01	185,000

GRANTOR: MCARTHUR NASSAU LLC
GRANTEE: JOHNSON PAUL & CARO

BUILDING NOTES

BUILDING DIMENSIONS

BAS=[YR=2020] W16 FST=[YR=2020] W5 S3 E5 N3$ S3 W5 N3 W12 FOP=[YR=2020] W23 S12 E23 N12$ S12 W23 N12 W14 S35 FST=[YR=2020] W5 S22 E14 N22 W9$ E9 S18 E17 FOP=[YR=2020] S5 E11 N8 W9 S3 W2$ E2 N3 E20 S6 FGR=[YR=2020] S24 E6 S2 E11 N2 E5 N24 W22$ E22 N56$.

EXTRA FEATURES

LN	OB/XF CODE	DESCRIPTION	BLD	CAP	L	W	UNITS	UT	Adj R	ADJ UNIT PRICE	ORIG COND	YEAR ON	YEAR ACTUAL	Q	% COND	OB/XF MKT VALUE	NOTES
1	0855	CONC PAVER	0	100	0	0	2,469.00	SF	10.00	10.00	100	2020	2020	3	98	24,196	
2	0861	POOL GUNIT	0	100	0	0	320.00	SF	85.00	85.00	100	2020	2020	3	90	24,480	
3	0911	SCRN RM A	0	100	0	0	1,120.00	SF	17.50	17.50	100	2020	2020	3	86	16,856	
4	0855	CONC PAVER	0	100	0	0	800.00	SF	10.00	10.00	100	2020	2020	3	98	7,840	
5	0871	POOL HTR R	0	100	0	0	1.00	UT	2,000.00	2,000.00	100	2020	2020	3	86	1,720	
6	0855	CONC PAVER	0	100	4	4	16.00	SF	10.00	10.00	100	2020	2020	3	98	157	
7	0855	CONC PAVER	0	100	4	4	16.00	SF	10.00	10.00	100	2020	2020	3	98	157	
8	0810	CONCRETE A	0	100	9	4	36.00	SF	6.50	6.50	100	2020	2020	3	98	229	
9	0810	CONCRETE A	0	100	5	4	20.00	SF	6.50	6.50	100	2020	2020	3	98	127	

LAND DESCRIPTION

TOTAL OB/XF 75,762

LN	USE CODE	CLS	LAND USE DESCRIPTION	CAP	RD	LOC ZONE	FRONT	DEPTH	TOT LND UTS	UNIT TYPE	DT	DPTH FACT	% COND	TOT ADJ	UNIT PRICE	ADJ UNIT PRICE	LAND VALUE	OTHER ADJUSTMENTS AND NOTES	YEAR	DENSITY	DECL	FRZ	YR	CONSRV
1	000100	C	RES	100		RSF-1	0.00	0.00	1.00	LT		1.00	1.00	1.00	350,000.00	350,000.00	350,000							

REVIEW DATE 05/05/2020 BY DJ Total Acres: 0.00 Total Land Value: 350,000 Market: 0 Agricultural: 0 Common: 350,000 PRINTED 07/30/2025 BY SYS