LOT 12
MCARTHUR ESTATES PBK 8/140

WEINSIER JAMES F 2007 REVOCABLE TRUST/WEINSIER JAM
96579 MCARTHUR ESTATES DRIVE
FERNANDINA BEACH, FL 32034

2025

12-2N-28-1685-0012-0000

BUILDING CHARACTERISTICS

ELEMENT	CD	CONSTRUCTION
Exterior Wall	10	ABOVE AVG 100
Roof Structur	08	IRREGULAR 100
Roof Cover	12	MODULAR MT 100
Interior Wall	05	DRYWALL 100
Interior Floo	12	HARDWOOD 70
Interior Floo	14	CARPET 30
Air Condition	03	CENTRAL 100
Heating Type	04	AIR DUCTED 100
Bedrooms		3 100
Bathrooms		3.5 100
Frame	02	WOOD FRAME 100
Stories	1.	1. 100
Units		0 100
Quality	05	Quality Level 05
DOR CODE	0100	SINGLE FAMILY
MAP NUM		MKT AREA 03
NEIGHBORHOOD/LOC	3049.00	

AREA TYPE	TOTAL GROSS AREA	PCT OF BASE	YEAR	TOT ADJ AREA	SUBAREA MARKET VALUE
BAS	3,229	100	2018	3,229	697,122
FGR	764	55	2018	420	90,676
FOP	194	30	2018	58	12,522
FOP	276	30	2018	83	17,920
USP	224	30	2020	67	14,465
TOTALS	4,687			3,857	832,705

MARKET ADJUSTMENTS

TYPE	MDL	EFF. AREA	TOT ADJ PTS	EFF. BASE RATE	REPL. COST NEW	AYB	EYB	ECON	FNCT		NORM	% COND
0500	11	3,857	140.1480	221.43	854,056	2018	2018	0	0	0	2.50	97.50

1 SFR CUST – 100% - 2021 Heated Area: 3229 HX Base Yr 2021

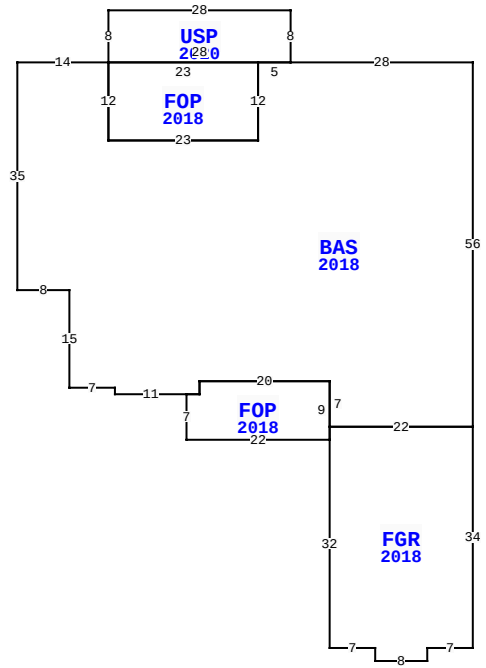

BLD DATE		LGL DATE	
XF DATE		LAND DATE	04/10/2025 MLU
INC DATE		AG DATE	

96579 MCARTHUR ESTATES DR, FERNANDINA BEACH

NASSAU COUNTY PROPERTY

PAGE 1 of 1 8

VALUATION SUMMARY

VALUATION BY		STANDARD
Tax Group: 8	Tax Dist:	
BUILDING MARKET VALUE		832,705
TOTAL MARKET OB/XF VALUE		13,278
TOTAL LAND VALUE - MARKET		385,000
TOTAL MARKET VALUE		1,230,983
SOH/AGL Deduction		622,472
ASSESSED VALUE		608,511
TOTAL EXEMPTION VALUE	HX HB WR	55,722
BASE TAXABLE VALUE		552,789
TOTAL JUST VALUE		1,230,983
NCON VALUE		0
INCOME VALUE		
PREVIOUS YEAR MKT VALUE		1,170,881

PERMIT NUM	DESCRIPTION	AMT	ISSUED
B2713	ADDITION	14,550	04/13/2020
B1709481	NEW CONSTR	421,035	10/25/2017

SALES DATA

OFF RECORD Number	DATE	TYPE INST	Q / U	V / I	RSN CD	SALE PRICE
2767/699	1/30/2025	WD	U	I	11	100
GRANTOR: WEINSIER JAMES						
GRANTEE: WEINSIER JAMES F 20						
2286/0160	6/21/2019	WD	Q	I	01	956,000
GRANTOR: ME PALMS INVESTMENTS						
GRANTEE: WEINSIER MARGARET &						

BUILDING NOTES

BUILDING DIMENSIONS

BAS=[YR=2018] W28USP=[YR=2020] N8 W28 S8 E28$ W5
FOP=[YR=2018] W23 S12 E23 N12$ S12 W23 N12 W14 S35 E8 S15 E7
S1 E11 FOP=[YR=2018] S7 E22 FGR=[YR=2018] S32 E7 S2 E8 N2
E7N34 W22 S2$ N9 W20 S2 W2$ E2 N2 E20 S7 E22 N56$.

EXTRA FEATURES

L N	OB/XF CODE	DESCRIPTION	BLD	CAP	L	W	UNITS	UT	Adj R	ADJ UNIT PRICE	ORIG COND	YEAR ON	YEAR ACTUAL	Q	% COND	OB/XF MKT VALUE	NOTES
1	0504	FP-ELECTRI	0	100	0	0	1.00	UT	2,000.00	2,000.00	100	2018	2018	3	98	1,960	
2	0855	CONC PAVER	0	100	0	0	1,652.00	SF	7.00	7.00	100	2018	2018	3	97	11,217	
3	0810	CONCRETE A	0	100	4	4	16.00	SF	6.50	6.50	100	2018	2018	3	97	101	

LAND DESCRIPTION

TOTAL OB/XF 13,278

L N	USE CODE	CLS	LAND USE DESCRIPTION	CAP	R D	LOC ZONE	FRONT	DEPTH	TOT LND UTS	UNIT TYPE	D T	DPTH FACT	% COND	TOT ADJ	UNIT PRICE	ADJ UNIT PRICE	LAND VALUE	OTHER ADJUSTMENTS AND NOTES	YEAR	DENSITY	DECL	FRZ	YR	CONSRV
1	000100	C	RES	100		RSF-1	0.00	0.00	1.00	LT		1.00	1.00	1.10	350,000.00	385,000.00	385,000							

REVIEW DATE 06/07/2021 BY RK Total Acres: 0.00 Total Land Value: 385,000 Market: 0 Agricultural: 0 Common: 385,000 PRINTED 07/30/2025 BY SYS