LOT 453
NORTH HAMPTON PHASE 2 PB 6/328

DAVIS LIVING TRUST/DAVIS WALKER B TRUSTEE
861870 NORTH HAMPTON CLUB WAY
FERNANDINA BEACH, FL 32034

2025

12-2N-27-1460-0453-0000

NASSAU COUNTY PROPERTY

BUILDING CHARACTERISTICS

ELEMENT	CD	CONSTRUCTION
Exterior Wall	16	WD FR STUC 100
Roof Structur	08	IRREGULAR 100
Roof Cover	03	COMP SHNGL 100
Interior Wall	05	DRYWALL 100
Interior Floo	11	CLAY TILE 50
Interior Floo	14	CARPET 50
Air Condition	03	CENTRAL 100
Heating Type	04	AIR DUCTED 100
Bedrooms		4 100
Bathrooms		3 100
Frame	02	WOOD FRAME 100
Stories	1.5	1.5 100
Units		0 100
Occupancy	00	NONE 100
Quality	04	Quality Level 04

DOR CODE 0100 SINGLE FAMILY
MAP NUM | MKT AREA 04
NEIGHBORHOOD/LOC 4043.00

AREA TYPE	TOTAL GROSS AREA	PCT OF BASE	YEAR	TOT ADJ AREA	SUBAREA MARKET VALUE
BAS	2,053	100	2004	2,053	301,115
FGR	630	55	2004	346	50,748
FOP	42	30	2004	13	1,907
FSP	375	40	2011	150	22,001
FUS	321	100	2004	321	47,081
TOTALS	3,421			2,883	422,851

MARKET ADJUSTMENTS

TYPE	MDL	EFF. AREA	TOT ADJ PTS	EFF. BASE RATE	REPL. COST NEW	AYB	EYB	ECON	FNCT		NORM	% COND
0900	01	2,883	116.9595	154.39	445,106	2004	2014	0	0	0	5.00	95.00

1 SNGL FAM – 100% - 2022 Heated Area: 2374 HX Base Yr 2022

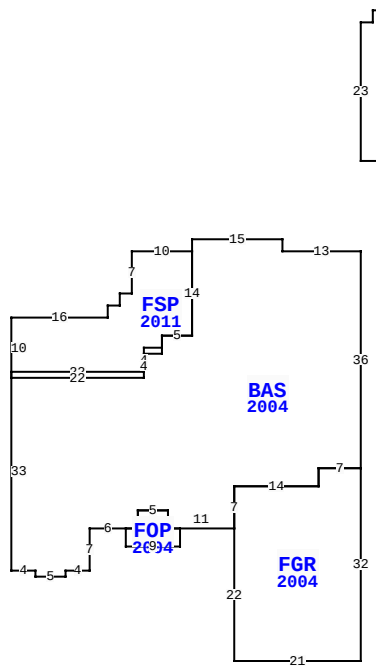

BLD DATE 03/29/2023 NW | LGL DATE
XF DATE | LAND DATE
INC DATE | AG DATE

861870 NORTH HAMPTON CLUB WAY, FERNANDINA BEACH

VALUATION SUMMARY

VALUATION BY		STANDARD
Tax Group: 4	Tax Dist:	
BUILDING MARKET VALUE		422,851
TOTAL MARKET OB/XF VALUE		20,172
TOTAL LAND VALUE - MARKET		127,500
TOTAL MARKET VALUE		570,523
SOH/AGL Deduction		260,902
ASSESSED VALUE		309,621
TOTAL EXEMPTION VALUE	HX HB	50,722
BASE TAXABLE VALUE		258,899
TOTAL JUST VALUE		570,523
NCON VALUE		0
INCOME VALUE		
PREVIOUS YEAR MKT VALUE		551,143

PERMIT NUM	DESCRIPTION	AMT	ISSUED
20005676	REPAIR/RRF	0	07/19/2020

SALES DATA

OFF RECORD Number	DATE	TYPE INST	Q U	V I	RSN CD	SALE PRICE
2449/0976	3/31/2021	WD	Q	I	02	445,000
GRANTOR: MAYO MATTHEW R & BRIT						
GRANTEE: DAVIS LIVING TRUST						
1943/0387	10/02/2014	WD	Q	I	01	342,000
GRANTOR: NORTHCUTT JOHN M & NA						
GRANTEE: MAYO MATTHEW R & BR						

BUILDING NOTES

BUILDING DIMENSIONS

BAS=[YR=2004] W13 N2 W15 S2 FSP=[YR=2011] W10 S7 W2 S2 W2 S2 W16 S10 E22 N4 E3 N3 E5 N14$ S14 W5 S2 W3 S4 W22 S33 E4 S1 E5 N1 E4 N7 E6 FOP=[YR=2004] S3 E9 N3 W2 N3 W5 S3 W2$ E2 N3 E5 S3 E11 FGR=[YR=2004] S22 E21 N32 W7 S3 W14 S7$ N7 E14 N3 E7 N36$ PTR=N15 FUS=[YR=2004] N23 E2 N2 E11 S25 W13$ S15$.

EXTRA FEATURES

LN	OB/XF CODE	DESCRIPTION	BLD	CAP	L	W	UNITS	UT	Adj R	ADJ UNIT PRICE	ORIG COND	YEAR ON	YEAR ACTUAL	Q	% COND	OB/XF MKT VALUE	NOTES
1	0500	FP-PRE FAB	0	100	0	0	1.00	UT	3,500.00	3,500.00	100	2004	2004	3	87	3,045	
2	0810	CONCRETE A	0	100	0	0	2,022.00	SF	6.50	6.50	100	2004	2004	3	83	10,909	
3	0462	ST/AL FNC	0	100	0	0	1,943.00	SF	10.00	10.00	100	2004	2004	3	32	6,218	

LAND DESCRIPTION

TOTAL OB/XF 20,172

LN	USE CODE	CLS	LAND USE DESCRIPTION	CAP	RD	LOC ZONE	FRONT	DEPTH	TOT LND UTS	UNIT TYPE	DT	DPTH FACT	% COND	TOT ADJ	UNIT PRICE	ADJ UNIT PRICE	LAND VALUE	OTHER ADJUSTMENTS AND NOTES	YEAR	DENSITY	DECL	FRZ	YR	CONSRV
1	000134	C	RES POND	100	0003	PUD	0.00	0.00	1.00	LT		1.00	1.00	1.00	127,500.00	127,500.00	127,500							

REVIEW DATE 02/05/2020 BY NWA Total Acres: 0.00 Total Land Value: 127,500 Market: 0 Agricultural: 0 Common: 127,500 PRINTED 07/30/2025 BY SYS