LOT 451
NORTH HAMPTON PHASE 2 PB 6/328

TROCINO MARGRIT A REVOCABLE TRUST/TROCINO MARGRIT
861832 NORTH HAMPTON CLUB WAY
FERNANDINA BEACH, FL 32034

2025

12-2N-27-1460-0451-0000

BUILDING CHARACTERISTICS

ELEMENT	CD	CONSTRUCTION
Exterior Wall	16	WD FR STUC 100
Roof Structur	08	IRREGULAR 100
Roof Cover	03	COMP SHNGL 100
Interior Wall	05	DRYWALL 100
Interior Floo	11	CLAY TILE 70
Interior Floo	12	HARDWOOD 30
Air Condition	03	CENTRAL 100
Heating Type	04	AIR DUCTED 100
Bedrooms		4 100
Bathrooms		3 100
Frame	02	WOOD FRAME 100
Stories	1.5	1.5 100
Units		0 100
Occupancy	00	NONE 100

Quality	04	Quality Level 04
DOR CODE	0100	SINGLE FAMILY
MAP NUM		MKT AREA 04
NEIGHBORHOOD/LOC	4043.00	

AREA TYPE	TOTAL GROSS AREA	PCT OF BASE	YEAR	TOT ADJ AREA	SUBAREA MARKET VALUE
BAS	2,380	100	2005	2,380	331,226
FGR	676	55	2005	372	51,771
FOP	50	30	2005	15	2,088
FSP	393	40	2005	157	21,849
FUS	385	100	2005	385	53,581
TOTALS	3,884			3,309	460,516

MARKET ADJUSTMENTS

TYPE	MDL	EFF. AREA	TOT ADJ PTS	EFF. BASE RATE	REPL. COST NEW	AYB	EYB	ECON	FNCT		NORM	% COND
0900	01	3,309	116.4996	153.78	508,858	2005	2005	0	0	0	9.50	90.50

1 SNGL FAM – 100% - 2006 Heated Area: 2765 HX Base Yr 2006

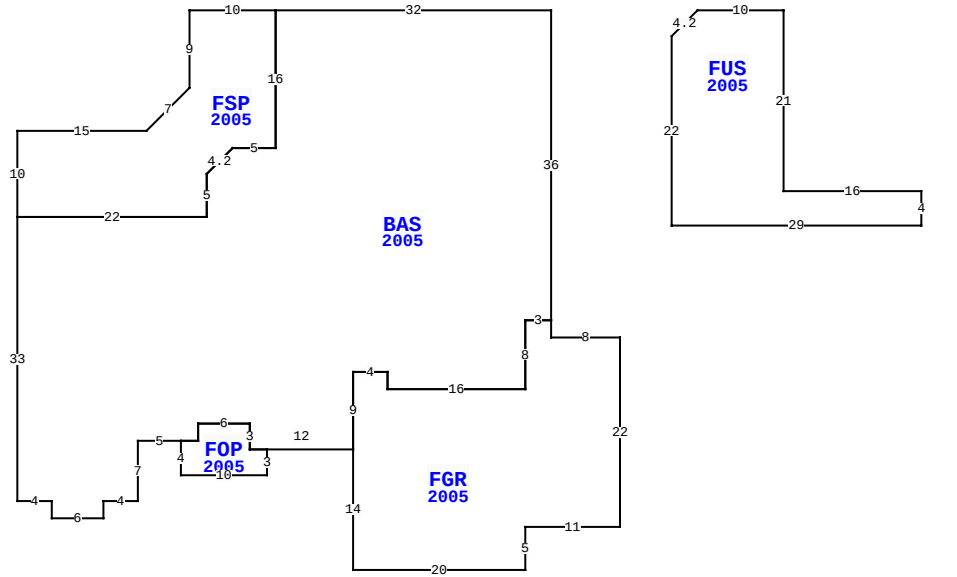

BLD DATE	03/29/2023	NW	LGL DATE
XF DATE			LAND DATE
INC DATE			AG DATE

861832 NORTH HAMPTON CLUB WAY, FERNANDINA BEACH

NASSAU COUNTY PROPERTY

PAGE 1 of 1 4

VALUATION SUMMARY

VALUATION BY		STANDARD
Tax Group: 4	Tax Dist:	
BUILDING MARKET VALUE		460,516
TOTAL MARKET OB/XF VALUE		32,298
TOTAL LAND VALUE - MARKET		127,500
TOTAL MARKET VALUE		620,314
SOH/AGL Deduction		242,761
ASSESSED VALUE		377,553
TOTAL EXEMPTION VALUE	WX HX HB	55,722
BASE TAXABLE VALUE		321,831
TOTAL JUST VALUE		620,314
NCON VALUE		0
INCOME VALUE		
PREVIOUS YEAR MKT VALUE		600,318

PERMIT NUM	DESCRIPTION	AMT	ISSUED
B16190	ADDITION	7,200	09/01/2005
M0509843	H/AC	0	06/01/2005
E0514923	ELEC OTHER	1,500	05/01/2005
P09178	OTHER	0	03/01/2005
R07215	REPAIR/RRF	3,500	02/01/2005
B14547	NEW CONSTR	463,500	02/01/2005

SALES DATA

OFF RECORD Number	DATE	TYPE INST	Q / U	V / I	RSN CD	SALE PRICE
2797/263	6/11/2025	WD	U	I	11	100
GRANTOR: TROCINO MARGRIT						
GRANTEE: TROCINO MARGRIT A R						
1365/0392	11/07/2005	WD	Q	I		463,500
GRANTOR: INTERVEST CONSTRUCTIO						
GRANTEE: TROCINO FRANK P & M						

BUILDING NOTES

BUILDING DIMENSIONS

BAS=[YR=2005] W32 FSP=[YR=2005] W10 S9 D5 L5 W15 S10 E22 N5 R3 U3 E5 N16$ S16 W5 D3 L3 S5 W22 S33 E4 S2 E6 N2 E4 N7 E5 FOP=[YR=2005] S4 E10 N3 W2 N3 W6 S2 W2$ E2 N2 E6 S3 E12 FGR=[YR=2005] S14 E20 N5 E11 N22 W8 N2 W3 S8 W16 N2 W4 S9$ N9 E4 S2 E16 N8 E3 N36$ PTR=E14 S3 FUS=[YR=2005] S22 E29 N4 W16 N21 W10 D3 L3 $ N3 W14$.

EXTRA FEATURES

LN	OB/XF CODE	DESCRIPTION	BLD	CAP	L	W	UNITS	UT	Adj R	ADJ UNIT PRICE	ORIG COND	YEAR ON	YEAR ACTUAL	Q	% COND	OB/XF MKT VALUE	NOTES
1	0855	CONC PAVER	0	100	0	0	862.00	SF	10.00	10.00	100	2005	2005	3	84	7,241	
2	0812	CONCRETE C	0	100	0	0	1,320.00	SF	4.00	4.00	100	2005	2005	3	84	4,435	
3	0100	BAR-B-Q	0	100	0	0	1.00	UT	200.00	200.00	100	2005	2005	3	22	44	
4	0500	FP-PRE FAB	0	100	0	0	1.00	UT	3,500.00	3,500.00	100	2005	2005	3	88	3,080	
5	0871	POOL HTR R	0	100	0	0	1.00	UT	2,000.00	2,000.00	100	2005	2005	3	22	440	
6	0910	SCRN RM L	0	100	0	0	1,240.00	SF	15.00	15.00	100	2005	2005	3	22	4,092	
7	0861	POOL GUNIT	0	100	0	0	378.00	SF	85.00	85.00	100	2005	2005	3	36	11,567	
8	0810	CONCRETE A	0	100	0	0	234.00	SF	6.50	6.50	100	2012	2012	3	92	1,399	

LAND DESCRIPTION

TOTAL OB/XF 32,298

LN	USE CODE	CLS	LAND USE DESCRIPTION	CAP	RD	LOC ZONE	FRONT	DEPTH	TOT LND UTS	UNIT TYPE	DT	DPTH FACT	% COND	TOT ADJ	UNIT PRICE	ADJ UNIT PRICE	LAND VALUE	OTHER ADJUSTMENTS AND NOTES	YEAR	DENSITY	DECL	FRZ	YR	CONSRV
1	000134	C	RES POND	100		PUD	0.00	0.00	1.00	LT		1.00	1.00	1.00	127,500.00	127,500.00	127,500							

REVIEW DATE 04/08/2021 BY NWA Total Acres: 0.00 Total Land Value: 127,500 Market: 0 Agricultural: 0 Common: 127,500 PRINTED 07/30/2025 BY SYS