LOT 415
NORTH HAMPTON PHASE 2 PB 6/328

RENDIN ROBERT & JANET TRUST/RENDIN ROBERT W TRUSTE
861377 N HAMPTON CLUB WAY
FERNANDINA BEACH, FL 32034-8705

2025

12-2N-27-1460-0415-0000

NASSAU COUNTY PROPERTY

BUILDING CHARACTERISTICS

ELEMENT	CD	CONSTRUCTION
Exterior Wall	16	WD FR STUC 100
Roof Structur	08	IRREGULAR 100
Roof Cover	03	COMP SHNGL 100
Interior Wall	05	DRYWALL 100
Interior Floo	14	CARPET 60
Interior Floo	11	CLAY TILE 40
Air Condition	03	CENTRAL 100
Heating Type	04	AIR DUCTED 100
Bedrooms		3 100
Bathrooms		2 100
Frame	02	WOOD FRAME 100
Stories	1.	1. 100
Units		0 100
Occupancy	00	NONE 100
Quality	04	Quality Level 04
DOR CODE	0100	SINGLE FAMILY
MAP NUM		MKT AREA 04
NEIGHBORHOOD/LOC	4043.00	

AREA TYPE	TOTAL GROSS AREA	PCT OF BASE	YEAR	TOT ADJ AREA	SUBAREA MARKET VALUE
BAS	2,044	100	2005	2,044	272,811
FGR	732	55	2005	403	53,788
FOP	49	30	2005	15	2,002
FOP	373	30	2005	112	14,949
FUS	385	100	2005	385	51,386
PTO	308	5	2013	15	2,002
TOTALS	3,891			2,974	396,938

MARKET ADJUSTMENTS

TYPE	MDL	EFF. AREA	TOT ADJ PTS	EFF. BASE RATE	REPL. COST NEW	AYB	EYB	ECON	FNCT		NORM	% COND
0900	01	2,974	111.7284	147.48	438,606	2005	2005	0	0	0	9.50	90.50

1 SNGL FAM – 100% - 2013 Heated Area: 2429 HX Base Yr 2013

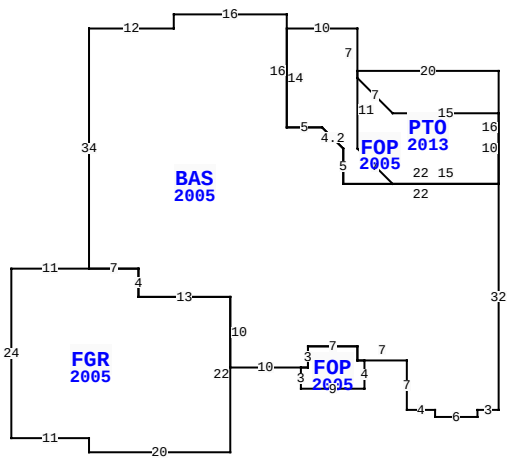

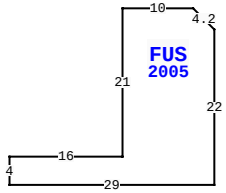

861377 NORTH HAMPTON CLUB WAY, FERNANDINA BEACH

BLD DATE	03/29/2023 NW	LGL DATE	
XF DATE		LAND DATE	
INC DATE		AG DATE	

NASSAU COUNTY PROPERTY — VALUATION SUMMARY

VALUATION BY		STANDARD
Tax Group: 4	Tax Dist:	
BUILDING MARKET VALUE		396,938
TOTAL MARKET OB/XF VALUE		19,284
TOTAL LAND VALUE - MARKET		105,000
TOTAL MARKET VALUE		521,222
SOH/AGL Deduction		201,271
ASSESSED VALUE		319,951
TOTAL EXEMPTION VALUE	WR HX HB VX	60,722
BASE TAXABLE VALUE		259,229
TOTAL JUST VALUE		521,222
NCON VALUE		0
INCOME VALUE		
PREVIOUS YEAR MKT VALUE		503,105

PERMIT NUM	DESCRIPTION	AMT	ISSUED
18002416	REPAIR/RRF	11,000	01/01/2018
B1328023	SCRNRM	6,560	11/01/2013
B1327983	SWIM POOL	13,000	11/01/2013
M0509844	H/AC	0	06/01/2005
E14743	ELEC OTHER	1,500	04/01/2005
P09285	OTHER	0	04/01/2005

SALES DATA

OFF RECORD Number	DATE	TYPE INST	Q / U	V / I	RSN CD	SALE PRICE
2437/0386	2/25/2021	WD	U	I	11	100
GRANTOR: RENDIN ROBERT W & JAN						
GRANTEE: RENDIN ROBERT W & J						
1691/0684	7/28/2010	WD	Q	I	02	336,000
GRANTOR: JOHNSON WILLIAM W & B						
GRANTEE: RENDIN ROBERT W & J						

BUILDING NOTES

BUILDING DIMENSIONS

PTO=[YR=2013] N16 W20 S11 D5 R5 E15$FOP=[YR=2005] N10 W15 U5 L5 N7 W10S14 E5 D3 R3 S5 E22$ BAS=[YR=2005] W22 N5 U3 L3 W5 N16 W16 S2 W12 S34 FGR=[YR=2005] W11 S24 E11 S2 E20 N22 W13 N4 W7$ E7 S4 E13 S10 E10 FOP=[YR=2005] S3 E9 N4 W1 N2 W7 S3 W1$ E1 N3 E7 S2 E7 S7 E4 S1 E6 N1 E3 N32$ PTR= E30 FUS=[YR=2005] E29 N22 U3 L3 W10 S21 W16 S4 $ W30 $.

EXTRA FEATURES

LN	OB/XF CODE	DESCRIPTION	BLD	CAP	L	W	UNITS	UT	Adj R	ADJ UNIT PRICE	ORIG COND	YEAR ON	YEAR ACTUAL	Q	% COND	OB/XF MKT VALUE	NOTES
1	0812	CONCRETE C	0	100	0	0	1,690.00	SF	4.00	4.00	100	2005	2005	3	84	5,678	
2	0910	SCRN RM L	0	100	16	19	304.00	SF	15.00	15.00	100	2013	2013	3	55	2,508	
3	0861	POOL GUNIT	0	100	0	0	192.00	SF	85.00	85.00	100	2013	2013	3	68	11,098	

LAND DESCRIPTION

TOTAL OB/XF 19,284

LN	USE CODE	CLS	LAND USE DESCRIPTION	CAP	RD	LOC ZONE	FRONT	DEPTH	TOT LND UTS	UNIT TYPE	DT	DPTH FACT	% COND	TOT ADJ	UNIT PRICE	ADJ UNIT PRICE	LAND VALUE	OTHER ADJUSTMENTS AND NOTES	YEAR	DENSITY	DECL	FRZ	YR	CONSRV
1	000140	C	RES GOLF	100		PUD	0.00	0.00	1.00	LT		1.00	1.00	1.00	105,000.00	105,000.00	105,000							

REVIEW DATE 04/04/2019 BY TWX Total Acres: 0.00 Total Land Value: 105,000 Market: 0 Agricultural: 0 Common: 105,000 PRINTED 07/30/2025 BY SYS